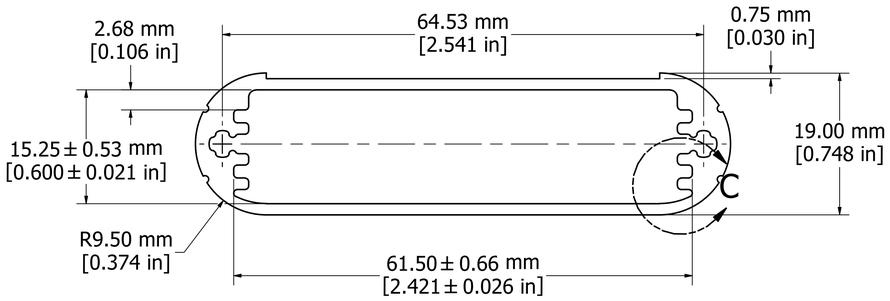

EXTRUSION

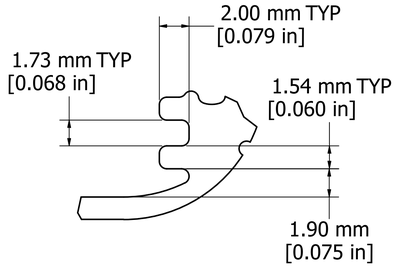

DETAIL C

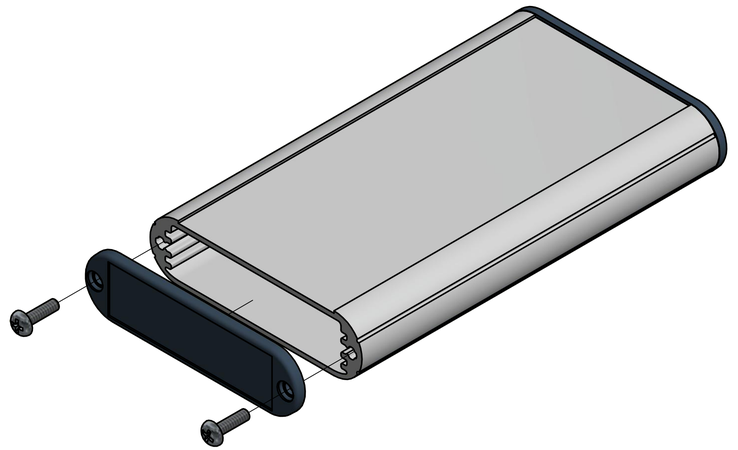

EXPLODED ASSEMBLY VIEW

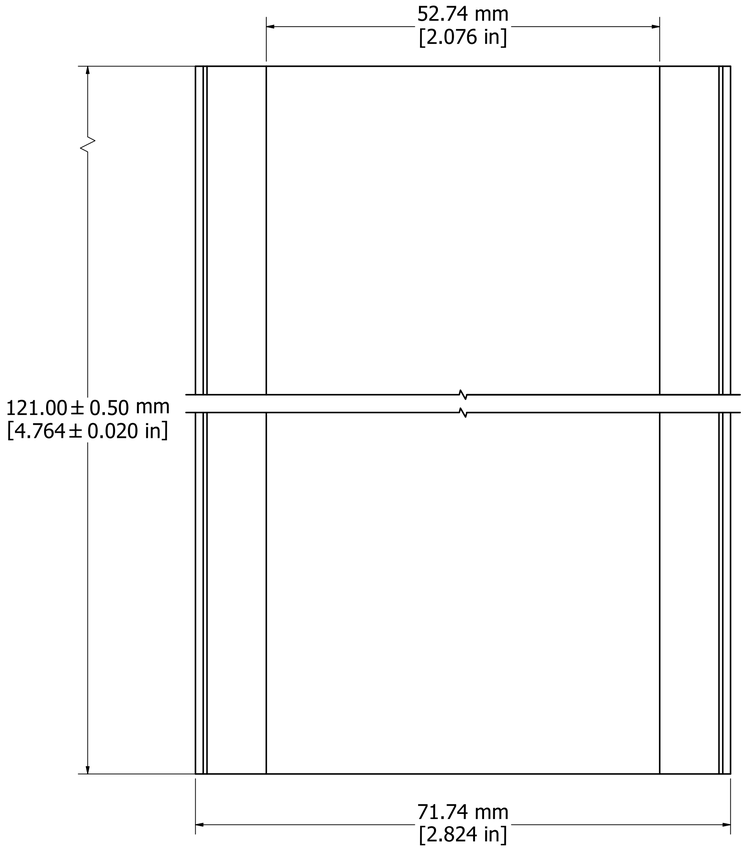

DESIGNED FOR 60MM WIDE PC BOARD

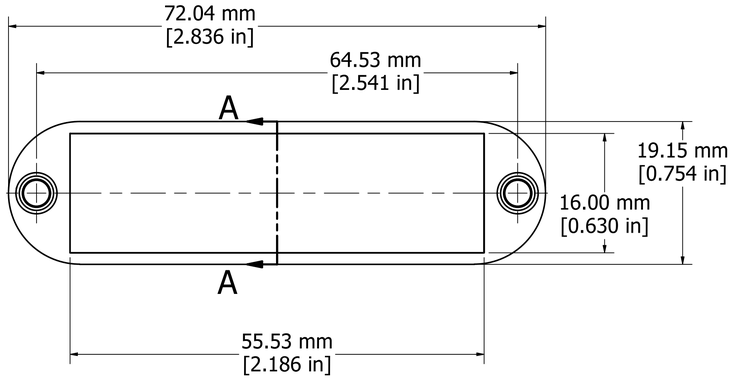

BEZEL

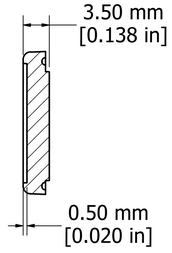

SECTION A-A

Enclosures can be Factory Modified (Milling, Drilling, Printing etc.)
Solid models of this enclosure available in STEP or IGES.
Contact Factory mjm@hammondmfg.com

NOTE
Purchased assembly includes box, plastic bezels, #6 Taptight screws and self adhesive rubber feet.
Box made from Extruded Aluminum 6063.
Bezels made from polycarbonate.

1455B1202	
PART NUMBERS	
Clear Anodized	1455B1202
Black Anodized	1455B1202BK
Blue Anodized	1455B1202BU
Red Anodized	1455B1202RD
ACCESSORIES	
See website for accessories.	

HAMMOND MANUFACTURING™

1455B1202

www.hammondmfg.com