E84016

Switched-mode power supply 24 V DC

PSU-1AC/24VDC-40A

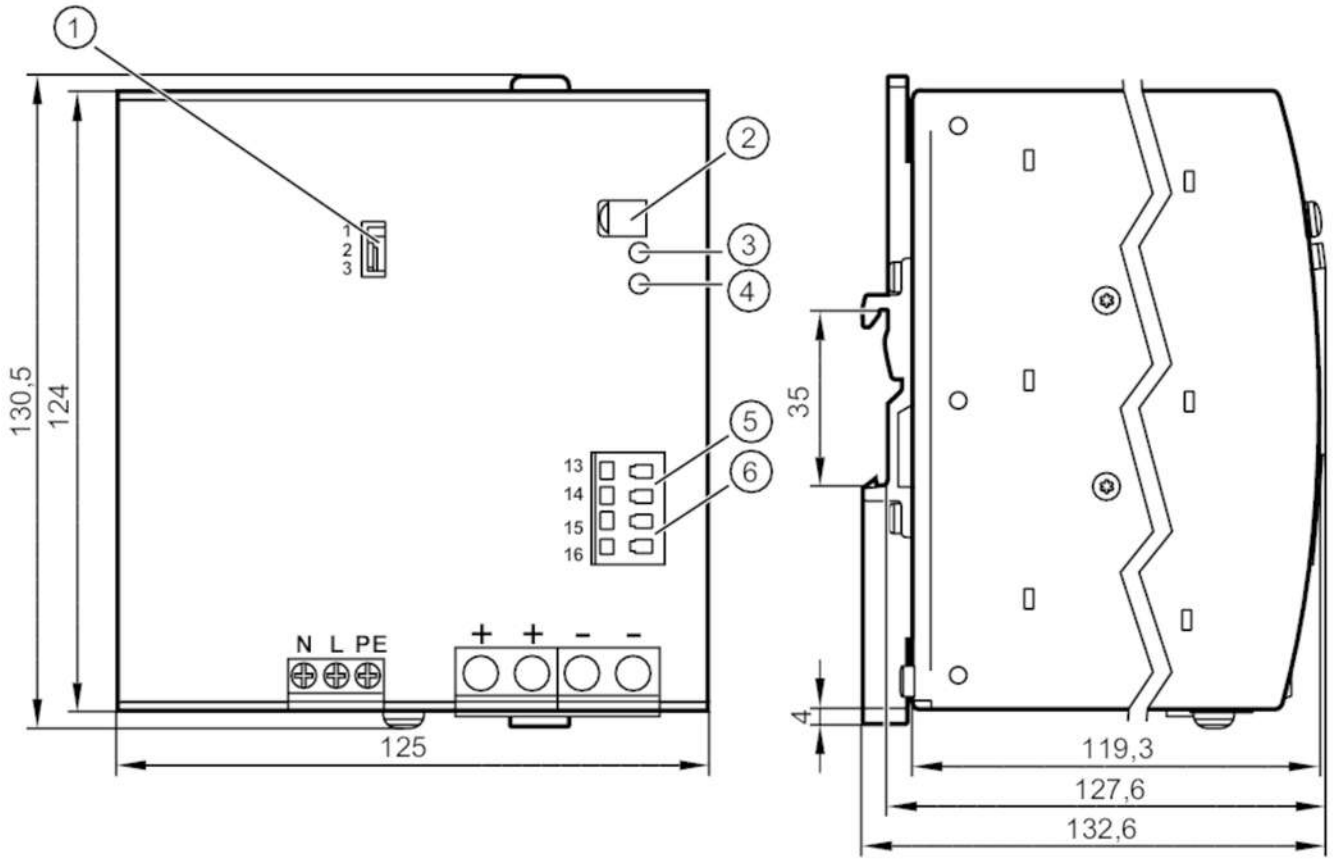

1 jumper single or parallel operation
2 potentiometer 24...28 V DC
3 LED DC ok
4 LED Overload
5 terminals DC ok Output
6 terminals Shut-Down input

Electrical data		
Frequency AC	[Hz]	47...64
Operating voltage tolerance	[%]	15...10
Nominal voltage AC	[V]	< 230
Input voltage range AC	[V]	100...240
Output voltage DC	[V]	24...28
Protection class		I; (IEC 61140)
Overvoltage protection		yes; (< 32 DC)
Output voltage	[V]	adjustable; output voltage to SELV, PELV
Max. output current at min. output voltage	[A]	40
Max. output current at max. output voltage	[A]	34.3
Max. output current peak at min. output voltage	[A]	60
Max. output current peak at max. output voltage	[A]	51.5

E84016

Switched-mode power supply 24 V DC

PSU-1AC/24VDC-40A

Output power (permanent)	[W]	960
Output power (peak)	[W]	1440
Note on output power (peak)	[W]	if consumption > 4 s the power is automatically reduced to the output power
Power factor (nominal voltage 120 V AC / 60 Hz)		0.99
Power factor (nominal voltage 230 V AC / 50 Hz)		0.99
Power reserve	[%]	50
Number of output circuits		1
Max. residual ripple	[mV]	100
Switch-on peak current (nominal voltage 120 V AC / 60 Hz)	[A]	17
Switch-on peak current (nominal voltage 230 V AC / 50 Hz)	[A]	11
Inrush current limitation		yes
Efficiency (nominal voltage 120 V AC / 60 Hz)	[%]	93.6
Efficiency (nominal voltage 230 V AC / 50 Hz)	[%]	94.6
External input protection		≥ B-16 A / ≥ C-16 A
Derating	[W/K]	24 (60...70 °C)
Mains buffering time (nominal voltage 120 V AC / 60 Hz)	[ms]	27
Mains buffering time (nominal voltage 230 V AC / 50 Hz)	[ms]	27
Input current (nominal voltage 120 V AC / 60 Hz)	[A]	8.6
Input current (nominal voltage 230 V AC / 50 Hz)	[A]	4.5
Power loss (nominal voltage 120 V AC / 60 Hz)	[W]	65.6
Power loss (nominal voltage 230 V AC / 50 Hz)	[W]	54.8
Back feeding protection	[V]	35
Outputs		
Short-circuit proof		yes
Overload protection		yes
Overload performance		Hiccup Mode; In the event of overload / short circuit, the output alternately supplies continuous power for 2 s and then switches off for 17 s.
Type DC-OK signal		relay output
Reliability of the DC OK signal		60 V DC (0.3 A) / 30 V DC (1 A) / 30 V AC (0.5 A)
Operating conditions		
Ambient temperature	[°C]	-25...70
Note on ambient temperature		observe the free space for convection (see operating instructions)
Storage temperature	[°C]	-40...85
Max. relative air humidity	[%]	95; (IEC 60068-2-30)
Protection		IP 20; (EN 60529)

E84016

Switched-mode power supply 24 V DC

PSU-1AC/24VDC-40A

Pollution degree		2; (IEC 62103: conductive soiling not permitted)	
Tests / approvals			
EMC		EN 61000-6-1	
		EN 61000-6-2	
		EN 61000-6-3	
		EN 61000-6-4	
		EN 61000-3-2	Class A
Vibration resistance		IEC 60068-2-6	±1,6 mm 2...17,8 Hz / 1 g 17,8...500 Hz
Shock resistance		IEC 60068-2-27	15 g 6 ms / 10 g 11 ms
Power Factor Correction (PFC)		met	
Mechanical data			
Weight	[g]	2044.5	
Type of mounting		mounting on DIN rail; (TH35 (EN 60715))	
Dimensions	[mm]	124 x 126 x 132.6	
Materials		steel sheet	
Displays / operating elements			
Display		DC ok	1 x LED
		overload	1 x LED
Remarks			
Remarks		Series connection of outputs only applies to identical units up to max. 150 V DC overall voltage	
Pack quantity		1 pcs.	

Electrical connection

screw terminals:

Connection

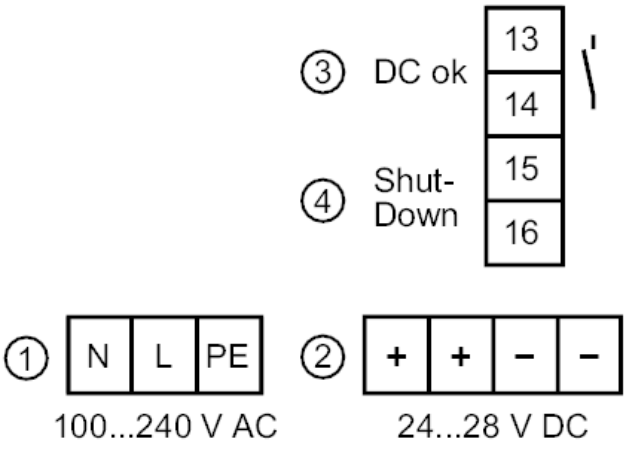

1: primary
2: secondary
3: DC ok relay output
4: Shut-Down input < 2 V / < 0.5 W

E84016

Switched-mode power supply 24 V DC

PSU-1AC/24VDC-40A

Diagrams and graphs

block diagram

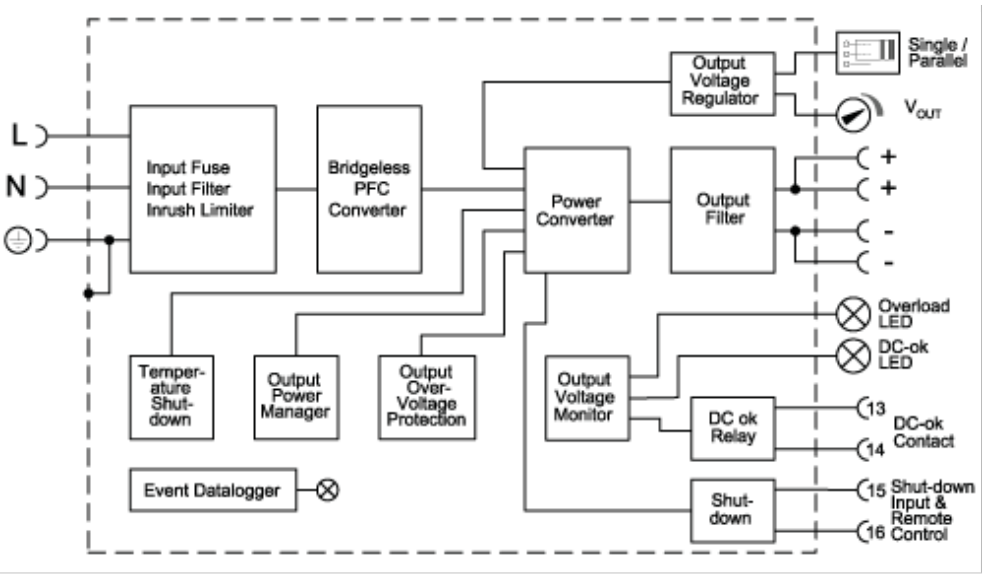

output characteristics

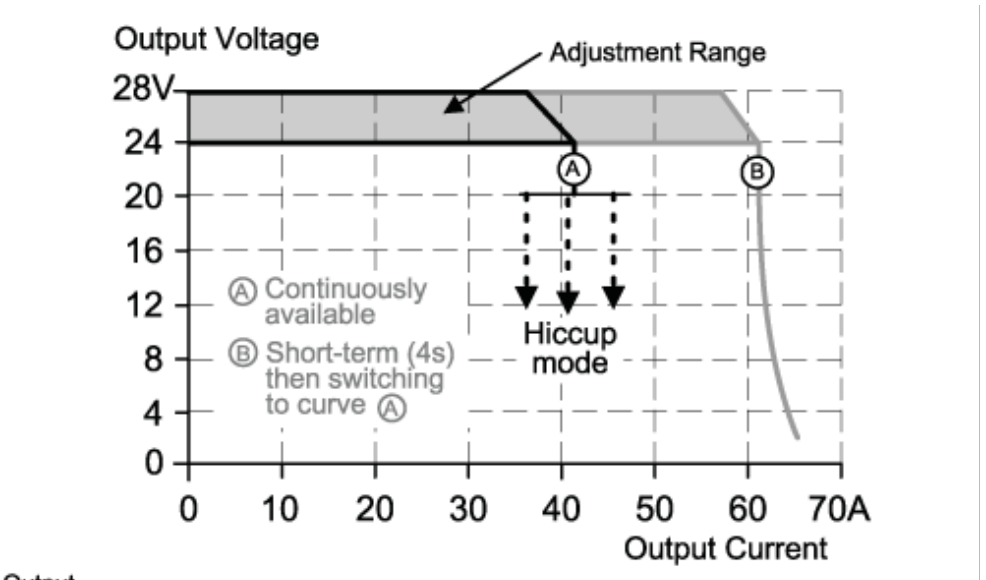

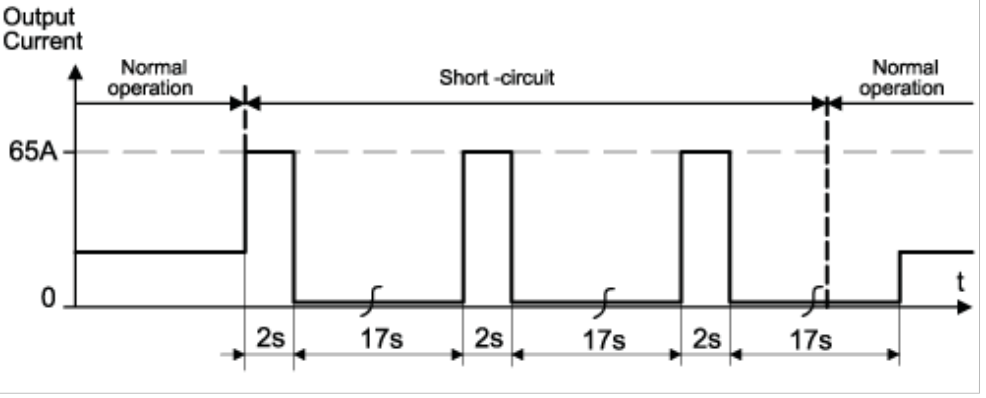

E84016

Switched-mode power supply 24 V DC

PSU-1AC/24VDC-40A

characteristic curve for degree of efficiency / power loss

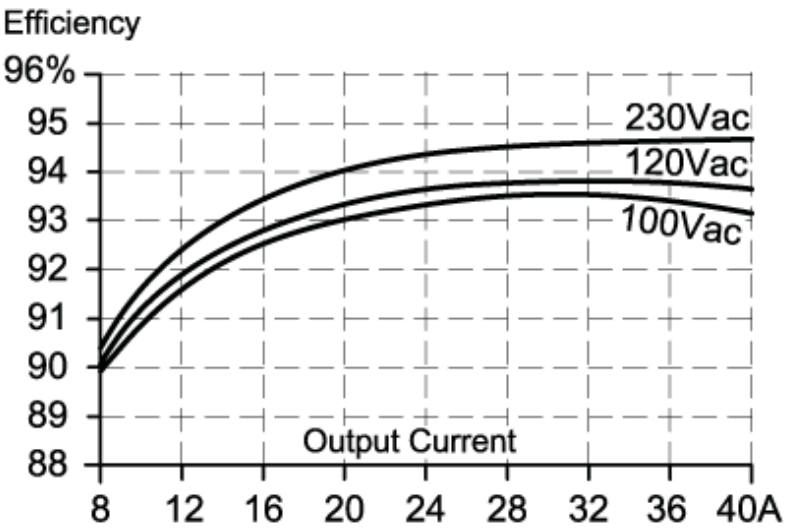

characteristic line for derating

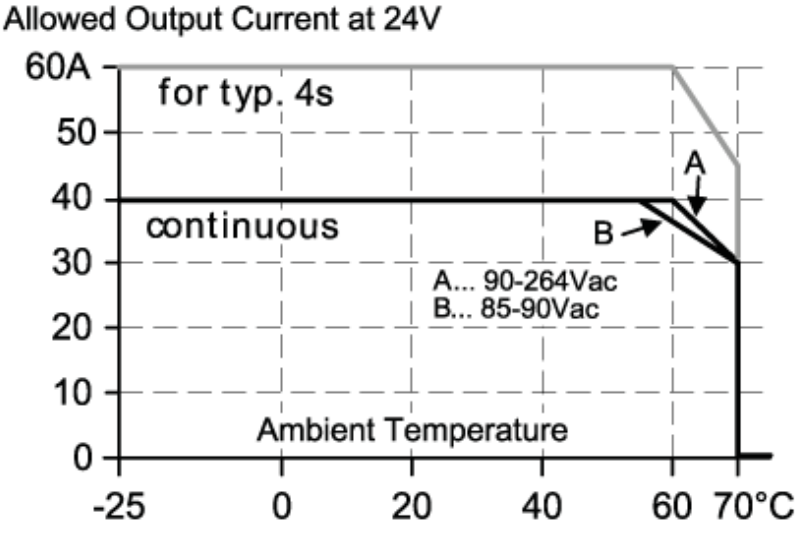

characteristic line for mains buffering time

