Product sheet

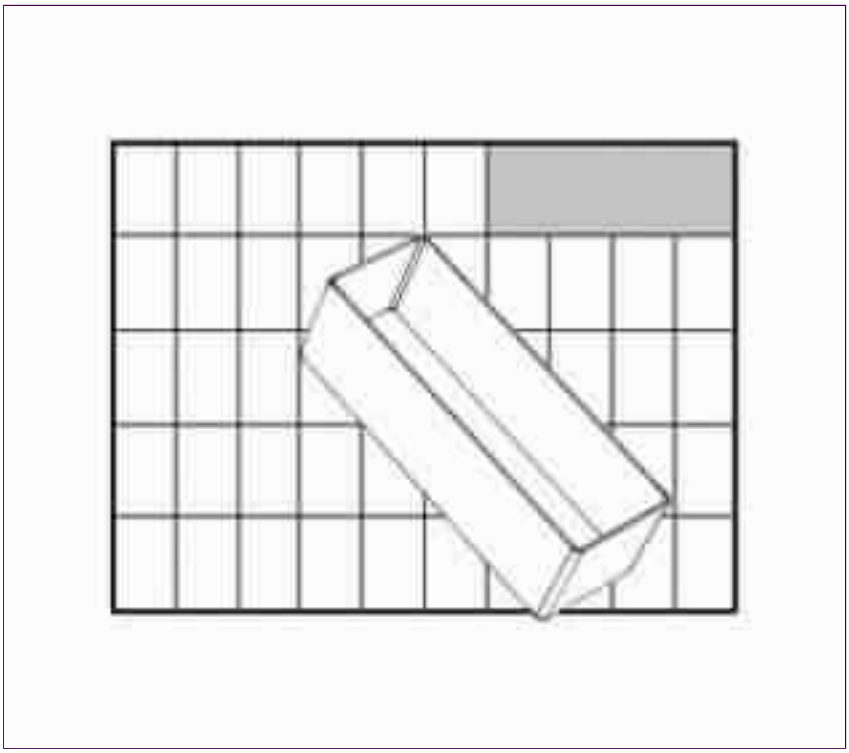

Item number/name **119283**

Insert 80 BA8-2

EAN unitnumber 5733439119283

Colour Clear

Description of the item

Insert 80 BA8-2. 16 per carton. Can be used for Assorter 80, Boxxser 80 and CarryLite 80. Made of polypropylene (PP).

BOM items

Item number	Product	Quantity
225144	INSERT BA8-2 PP	1

Materials

Item number	Material
600132	Polypropylene - PP

Item alternative

Item number	Product	Quantity
113045	BA8-2	144

Item dimensions

Net. Depth (mm) .....:	157,0
Net. Width (mm) .....:	55,0
Net. Height (mm) .....:	69,0
Inner Depth (mm) .....:	151,0
Inner Width (mm).....:	49,0
Inner Height (mm) .....:	65,0

Weight

Net weight (Kgs).....:	0,051
Tare weight (Kgs).....:	0,014
Gross weight (Kgs).....:	0,065

Volume

Multiple (Pieces).....:	16,00
Volume (m3).....:	0,00075

Capacity load

Carr. Load (Kgs).....:	0,00
Carr. Load (Ltrs).....:	0,50

Sales

raaco Great Britain Ltd
VAT No.: GB 232 6219 86
Wenrisc House, Meadow Court
High Street, Witney
Oxfordshire OX28 6ER
Tel: (01993) 776333
Fax: (01993) 776444

Headquarters:

raaco A/S
CVR No.: DK 22 12 28 19
VAT No.: DK 91 42 64 55
Platanvej 19
DK-4800 Nykøbing F
Tel.: +45 54 88 84 00