

Operator only yellow, button, red

Part no.	**FAK-R/V/Y**
Article no.	**229755**
Catalog No.	**FAK-R-V-Y**

Powering Business Worldwide

Delivery programme

Product range			Foot and palm switches
Basic function			Accessories
Function			maintained
Colour			
Button			Red
enclosure top			Yellow
Connection to SmartWire-DT			no

Technical data

General

Degree of protection, IEC/EN 60529			IP67, IP69K
Ambient temperature			
Open		°C	-25 - +40

Design verification as per IEC/EN 61439

Technical data for design verification			
Rated operational current for specified heat dissipation	I_n	A	0
Heat dissipation per pole, current-dependent	P_{vid}	W	0
Equipment heat dissipation, current-dependent	P_{vid}	W	0
Static heat dissipation, non-current-dependent	P_{vs}	W	0
Heat dissipation capacity	P_{diss}	W	0
Operating ambient temperature min.		°C	-25
Operating ambient temperature max.		°C	40
IEC/EN 61439 design verification			
10.2 Strength of materials and parts			
10.2.2 Corrosion resistance			Meets the product standard's requirements.
10.2.3.1 Verification of thermal stability of enclosures			Meets the product standard's requirements.
10.2.3.2 Verification of resistance of insulating materials to normal heat			Meets the product standard's requirements.
10.2.3.3 Verification of resistance of insulating materials to abnormal heat and fire due to internal electric effects			Meets the product standard's requirements.
10.2.4 Resistance to ultra-violet (UV) radiation			Please enquire
10.2.5 Lifting			Does not apply, since the entire switchgear needs to be evaluated.
10.2.6 Mechanical impact			Does not apply, since the entire switchgear needs to be evaluated.
10.2.7 Inscriptions			Meets the product standard's requirements.
10.3 Degree of protection of ASSEMBLIES			Does not apply, since the entire switchgear needs to be evaluated.
10.4 Clearances and creepage distances			Meets the product standard's requirements.
10.5 Protection against electric shock			Does not apply, since the entire switchgear needs to be evaluated.
10.6 Incorporation of switching devices and components			Does not apply, since the entire switchgear needs to be evaluated.
10.7 Internal electrical circuits and connections			Is the panel builder's responsibility.
10.8 Connections for external conductors			Is the panel builder's responsibility.
10.9 Insulation properties			
10.9.2 Power-frequency electric strength			Is the panel builder's responsibility.
10.9.3 Impulse withstand voltage			Is the panel builder's responsibility.
10.9.4 Testing of enclosures made of insulating material			Is the panel builder's responsibility.
10.10 Temperature rise			Not applicable.
10.11 Short-circuit rating			Is the panel builder's responsibility. The specifications for the switchgear must be observed.
10.12 Electromagnetic compatibility			Is the panel builder's responsibility. The specifications for the switchgear must be observed.

10.13 Mechanical function		The device meets the requirements, provided the information in the instruction leaflet (IL) is observed.

Technical data ETIM 6.0

Low-voltage industrial components (EG000017) / Foot and palm switch enclosure base (EC002031)

Electric engineering, automation, process control engineering / Low-voltage switch technology / Command and alarm device / Foot and palm switch enclosure base (ecl@ss8.1-27-37-12-41 [ACN980008])

Colour		Red

Approvals

		IEC/EN 60947-5; UL 508; CSA-C22.2 No. 14-05; CSA-C22.2 No. 94-91; CE marking
		E29184
		NKCR
		012528
		3211-03
		UL listed, CSA certified
		UL/CSA Type 3R, 4X, 12, 13

Dimensions

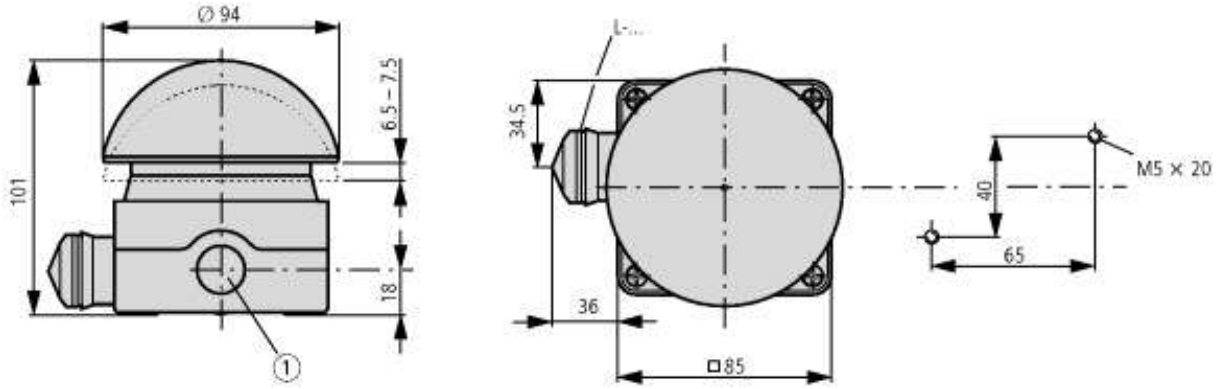

① 3 x M20 (PG 13.5) lateral
1 x M16 in base

Additional product information (links)

IL04716006Z (AWA1160-1696) Indicator light	
IL04716006Z (AWA1160-1696) Indicator light	ftp://ftp.moeller.net/DOCUMENTATION/AWA_INSTRUCTIONS/IL04716006Z2011_02.pdf
IL04716017Z (AWA1160-1467) Foot and palm switches	
IL04716017Z (AWA1160-1467) Foot and palm switches	ftp://ftp.moeller.net/DOCUMENTATION/AWA_INSTRUCTIONS/IL04716017Z2011_02.pdf

© 03/2016 by Eaton Industries GmbH