Brand of NTN corporation

Technical data

EXFE216

Bearing units



Grey cast housing, radial insert ball bearing with eccentric locking collar, seal with slinger

KIT CONTENT

EX216G2, FE216

VISUAL (S)

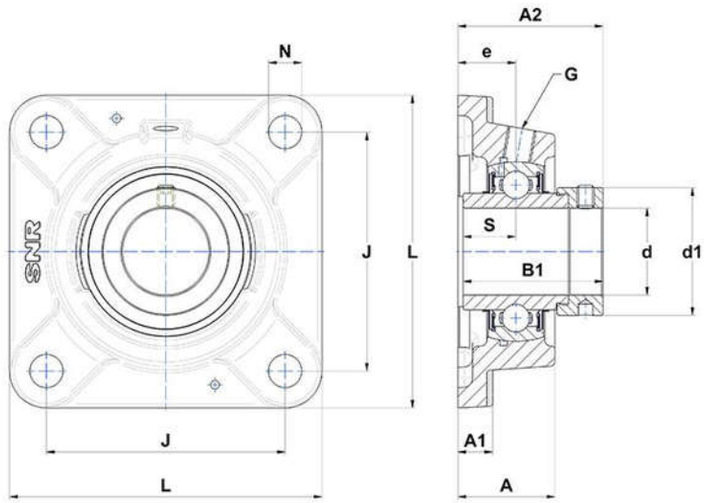

PRODUCT DEFINITION

Brand	SNR
A - Housing height	61 mm
A1 - Housing foot height / flange height	20 mm
A2 - Total height from mounting surface	99,2 mm
B - Width of Inner Ring	74,6 mm
B1 - Overall width Inner Ring	95,2 mm

EXFE216
Bearing units

PRODUCT DEFINITION	
d - Shaft diameter	80 mm
d1 - Outer dia of eccent. Lock. collar / nut of adapter sleeve	110 mm
e - Distance mounting surface to bearing center	41,3 mm
G - Grease fitting	R1/8"
J - Mounting holes distance	153 mm
L - Housing width / diameter	197 mm
N - Mounting hole dimension	23 mm
S - Distance front side/bearing centre	37,3 mm

PRODUCT PERFORMANCE	
C - Dynamic load rating	72500000 mN
C0 - Static load rating	54200000 mN
Operating temperature min.	253,15 °K
Operating temperature max.	373,15 °K

OTHER FEATURES	
Mass	7,37 kg
Recommended tightening torque for set screw	33 N-m