IIT001

Inductive sensor

IIK2014BARKA/M/V4A/LS-104-AK

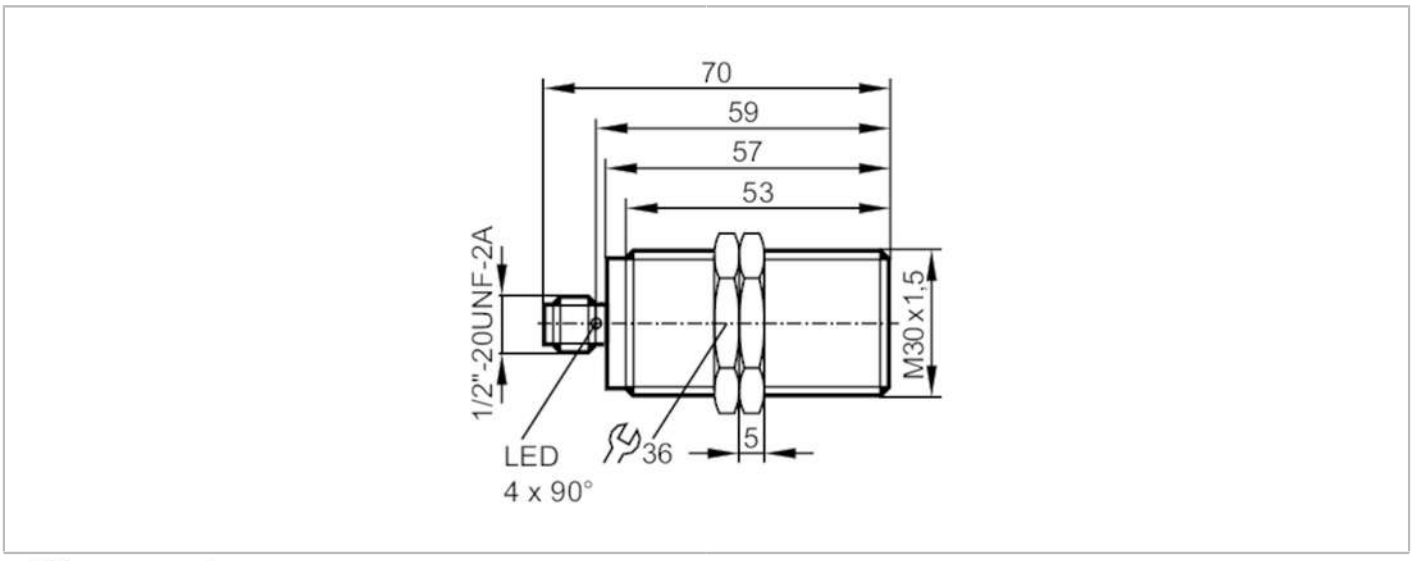

Product characteristics		
Output function		normally open
Sensing range	[mm]	14
Housing		threaded type
Dimensions	[mm]	M30 x 1.5 / L = 70
Application		
Special feature		Gold-plated contacts
Application		regular cleaning processes
Electrical data		
Operating voltage	[V]	20...140 AC/DC
Protection class		II
Reverse polarity protection		yes
Max. power-on delay time	[ms]	1000
Outputs		
Output function		normally open
Max. voltage drop switching output DC	[V]	5.5
Max. voltage drop switching output AC	[V]	5.5
Minimum load current	[mA]	5
Max. leakage current	[mA]	1
Permanent current rating of switching output AC	[mA]	80; (200 (...80 °C))
Permanent current rating of switching output DC	[mA]	80; (200 (...80 °C))
Short-time current rating of switching output	[mA]	1200; (20ms / 0,5Hz / 80 mA (> 80°C))
Switching frequency AC	[Hz]	25
Switching frequency DC	[Hz]	100
Short-circuit protection		yes

IIT001

Inductive sensor

IIK2014BARKA/M/V4A/LS-104-AK

Type of short-circuit protection		pulsed	
Overload protection		yes	
Detection zone			
Sensing range	[mm]	14	
Operating distance	[mm]	0...11.34	
Accuracy / deviations			
Correction factor		steel: 1 / stainless steel: 0.7 / brass: 0.5 / aluminium: 0.4 / copper: 0.3	
Hysteresis	[% of Sr]	2...15	
Operating conditions			
Ambient temperature	[°C]	0...100	
Protection		IP 68; IP 69K; ("COP")	
Tests / approvals			
EMC		EN 61000-4-2 ESD	4 kV CD / 8 kV AD
		EN 61000-4-3 HF radiated	10 V/m
		EN 61000-4-4 Burst	2 kV
		EN 61000-4-6 HF conducted	10 V
		EN 55011	class B
MTTF	[years]	380	
UL approval		Ta	0...40 °C
		Enclosure type	Type 1
		power supply	Hazardous voltage
		File number UL	E174191
Mechanical data			
Weight	[g]	140.8	
Housing		threaded type	
Mounting		flush mountable	
Dimensions	[mm]	M30 x 1.5 / L = 70	
Thread designation		M30 x 1.5	
Materials		housing: stainless steel (1.4404 / 316L); sensing face: PEEK; lock nuts: stainless steel (1.4404 / 316L)	
Displays / operating elements			
Display		switching status	4 x 90° LED, yellow
Accessories			
Items supplied		lock nuts: 2	
Remarks			
Pack quantity		1 pcs.	

IIT001

Inductive sensor

IIK2014BARKA/M/V4A/LS-104-AK

Electrical connection - plug

Connector: 1 x 1/2"; coding: C; Contacts: gold-plated

