efector100

E11049

MOUNTING CLAMP M30

Accessories

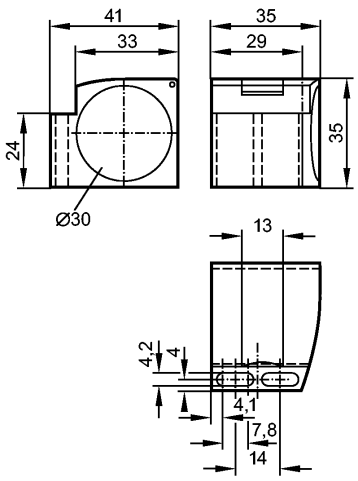

Made in Germany

Product characteristics		
Ø 30 mm		
Mounting clamp		
Environment		
Temperature range [°C]		-25...85
Mechanical data		
Design		with end stop for types M30
Housing materials		PC
Weight	[kg]	0.021
Remarks		
Pack quantity	[piece]	1