PG2795

Flush pressure sensor with analogue display

PG-004-REA01-MFRKG/US/ /P

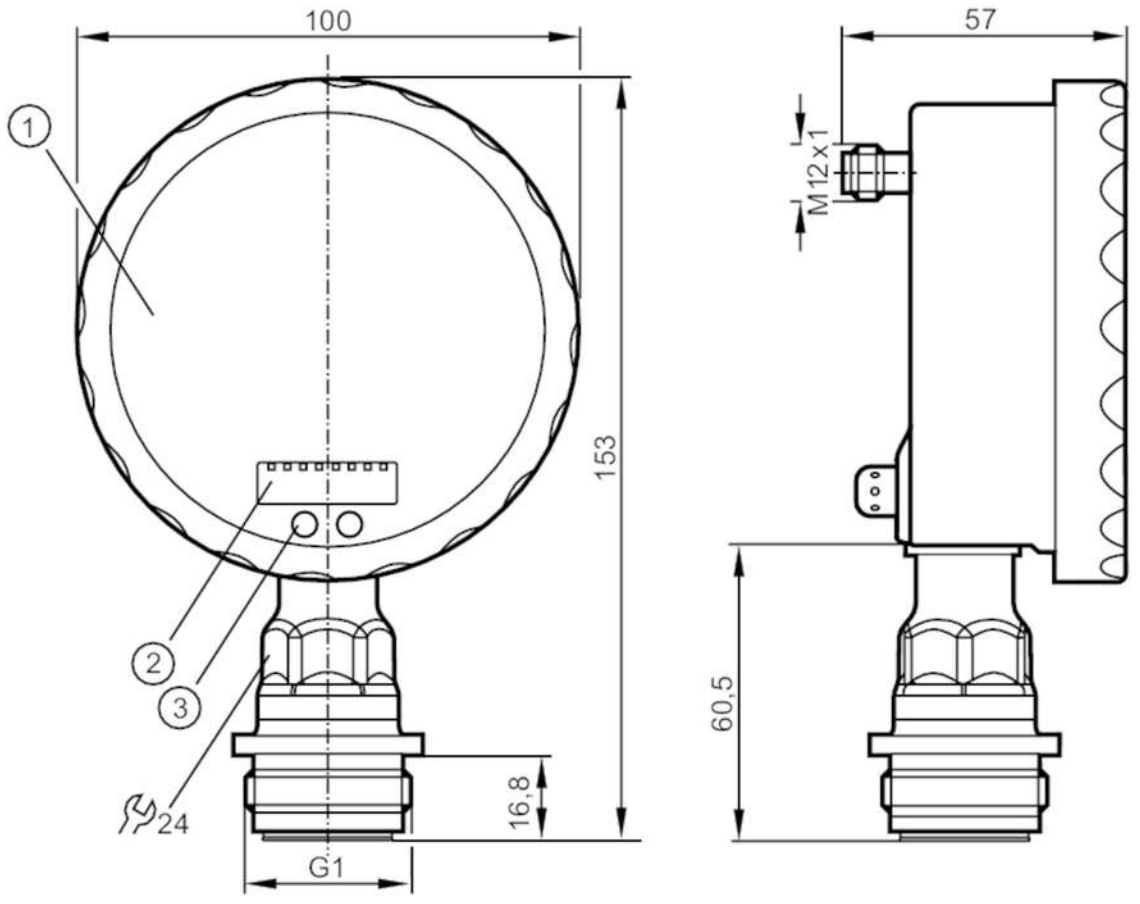

1 analogue display
2 alphanumeric display 4-digit
3 sensor field (programming button)

Product characteristics				
Number of inputs and outputs		Number of digital outputs: 1; Number of analogue outputs: 1		
Measuring range		-1...4 bar	-14.5...58 psi	
Process connection		threaded connection G 1 external thread Aseptoflex Vario		
Application				
Special feature		Gold-plated contacts		
Application		flush mountable for the food and beverage industry		
Media		viscous media and liquids with suspended particles; liquids and gases		
Medium temperature	[°C]	-25...125; (145 max. 1h)		
Min. bursting pressure		100 bar	1450 psi	10 MPa
Pressure rating		30 bar	435 psi	3 MPa
Type of pressure		relative pressure; vacuum		
No dead space		yes		
MAWP (for applications according to CRN)	[bar]	30		

PG2795

Flush pressure sensor with analogue display

PG-004-REA01-MFRKG/US/ /P

Electrical data		
Operating voltage	[V]	18...32 DC
Current consumption	[mA]	< 70; (24 V)
Min. insulation resistance	[MΩ]	100; (500 V DC)
Protection class		III
Reverse polarity protection		yes
Power-on delay time	[s]	6
Integrated watchdog		yes
Inputs / outputs		
Number of inputs and outputs		Number of digital outputs: 1; Number of analogue outputs: 1
Outputs		
Total number of outputs		2
Output signal		switching signal; analogue signal; (configurable)
Electrical design		PNP/NPN
Number of digital outputs		1
Output function		normally open / normally closed; (parameterisable)
Max. voltage drop switching output DC	[V]	2
Permanent current rating of switching output DC	[mA]	250
Switching frequency DC	[Hz]	50
Number of analogue outputs		1
Analogue current output	[mA]	4...20, invertible; (scalable)
Max. load	[Ω]	(Ub - 10 V) / 20 mA
Short-circuit protection		yes
Type of short-circuit protection		pulsed
Overload protection		yes

Measuring/setting range		
Measuring range	-1...4 bar	-14.5...58 psi
Set point SP	-0.99...6.4 bar	-14.35...92.8 psi
Reset point rP	-1...6.39 bar	-14.5...92.65 psi
Analogue start point	-1...5.4 bar	-14.5...78.3 psi
Analogue end point	0...6.4 bar	0...92.8 psi
In steps of	0.005 bar	0.05 psi

Accuracy / deviations	
Switch point accuracy [% of the span]	< ± 0,2; (Turn down 1:1)
Repeatability [% of the span]	< ± 0,1; (with temperature fluctuations < 10 K; Turn down 1:1)
Characteristics deviation [% of the span]	< ± 0,2; (Turn down 1:1 , linearity, incl. hysteresis and repeatability , limit value setting to DIN EN IEC 62828-1)
Linearity deviation [% of the span]	< ± 0,15; (Turn down 1:1)
Hysteresis deviation [% of the span]	< ± 0,15; (Turn down 1:1)
Long-term stability	< ± 0,1; (Turn down 1:1; per year)

PG2795

Flush pressure sensor with analogue display

PG-004-REA01-MFRKG/US/ /P

[% of the span]			
Temperature coefficient zero point [% of the span / 10 K]		< ± 0,05; (0...70 °C)	
Temperature coefficient span [% of the span / 10 K]		< ± 0,15; (0...70 °C)	
Response times			
Response time	[ms]	< 10	
Damping process value dAP	[s]	0.01...30	
Damping for the analogue output dAA	[s]	0.01...30	
Step response time analogue output	[ms]	25	
Operating conditions			
Ambient temperature	[°C]	-25...80	
Storage temperature	[°C]	-40...100	
Protection		IP 67; IP 69K	
Tests / approvals			
EMC		EN 61000-4-2 ESD	4 kV CD / 8 kV AD
		EN 61000-4-3 HF radiated	10 V/m
		EN 61000-4-4 Burst	2 kV
		EN 61000-4-5 Surge	0,5/1 kV
		EN 61000-4-6 HF conducted	10 V
Shock resistance		DIN IEC 68-2-27	50 g (11 ms)
Vibration resistance		DIN IEC 68-2-6	20 g (10...2000 Hz)
MTTF	[years]	100	
Note on approval		factory certificate available as download at www.factory-certificate.ifm	
Mechanical data			
Weight	[g]	522.5	
Dimensions	[mm]	153 x 100 x 57	
Materials		stainless steel (316L/1.4404); PA; FKM; PTFE; viewing glass: laminated safety glass 4 mm	
Materials (wetted parts)		ceramics (99.9 % Al2O3); stainless steel (316L/1.4435); surface characteristics: Ra < 0,4 / Rz 4; PTFE	
Min. pressure cycles		100 million	
Process connection		threaded connection G 1 external thread Aseptoflex Vario	
Displays / operating elements			
Display		Display unit	2 x LED, green
		switching status	LED, yellow
		switch points	LED ring, red
		function display	alphanumeric display, red 4-digit
		measured values	analogue display, 0...350° rotatable, pointer not visible when unit disconnected
		measured values	alphanumeric display, red 4-digit
With scale		yes	
Extended display range (max.)		6.4 bar	92.8 psi

PG2795

Flush pressure sensor with analogue display

PG-004-REA01-MFRKG/US/ /P

Remarks	
Remarks	characteristics deviation in the extended display range: 1.5 % of the span
	switch point accuracy in the extended display range: 1.5 % of the span
Pack quantity	1 pcs.

Electrical connection

Connector: 1 x M12; coding: A; Contacts: gold-plated



Connection

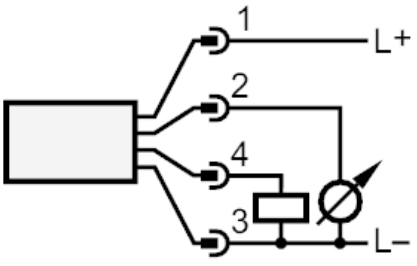

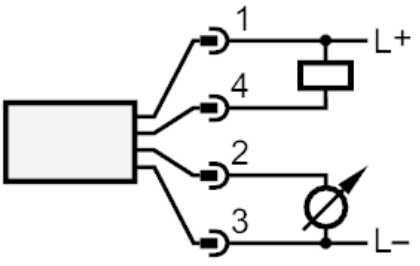

OUT1	switching output
OUT2	analogue output