Detector range for BiWire systems EFBW5IN1DET & EFBWOPDET



Overview

The BiWire detector range offers a 5 in 1 detector approved to EN54 parts 5 & 7 and an optical detector approved to EN54 part 7. Both cover many building needs. Quick and simple to install with a stylish low profile design, the detector is mounted on our standard conventional base (EFXN520). Each detector is fitted with a 360˚ viewable LED for indication.

This 5 in 1 detector can be configured to operate as either an optical detector, photo-thermal detector or 1 of 3 heat detector modes (rate of rise and 2 fixed heat models) using the four position switches located at the back of the detector. The EFBW5IN1DET is certified for use in all 5 modes.

Features:

- Five modes in one detector
- Offers a range of sensor types
- 360° indicator LED using lightpipe technology
- Quick and simple to install
- Easy to maintain/service

Benefits:

- Suitable for a broad range of applications
- Wide viewing angle for increased LED visibility
- Positive "lock" indication
- Discreet design for incorporation into any decor

Powering Business Worldwide

Technical specification

Code	EFBW5IN1DET
Description	Detector 5 in 1
Standards	EN54 Part 5 & 7 2001
Supply ratings	
Operating voltage	15V DC to 30V DC
Standby current	30µA (max)
Startup current	340µA (max)
Alarm current	25mA (max)
Fixing information	
Mounting position	Ceiling in open areas
Mounting options	Surface mount with FXN520 base
Area coverage	100m² (subject to local standards)
System wiring	2 Core
Environmental	
Operating temperature	-20°C to 75°C (dependent on setting)
Humidity (non condensing)	0 to 93%
Physical	
Construction	PC/ABS
Colour	White
Dimensions excl base (dia x depth)	104mm x 42mm
Dimensions incl base (dia x depth)	104mm x 55mm
Ingress protection	IP40
EMC	CE Marked
Compatibility	
Suitable for use with	Eaton's BiWire fire system

EFBWOPTDET	
Operating voltage	15 to 35 V DC
Standby current (max)	80µA
Alarm current (typ)	20mA
Ambient temperature	60°C to -10°C
Relative humidity	0 to 95%
Height (without base)	34mm
Height (with base)	47mm
Diameter	104mm
Weight (without base)	78g
Material	PC/ABS
Colour	White
Compatible base	EFXN520
EFXN520 Base	
Supply voltage	15 to 35 V DC
Cable size	0.5 to 25mm
Mounting hole centres	50 to 80mm
Recommended cable types	FIRETUF or FP200
Applicable standards:	EN54-7:2000 +A1:2002 + A2:2006
Declaration of performance:	DoP0437

Dimensions

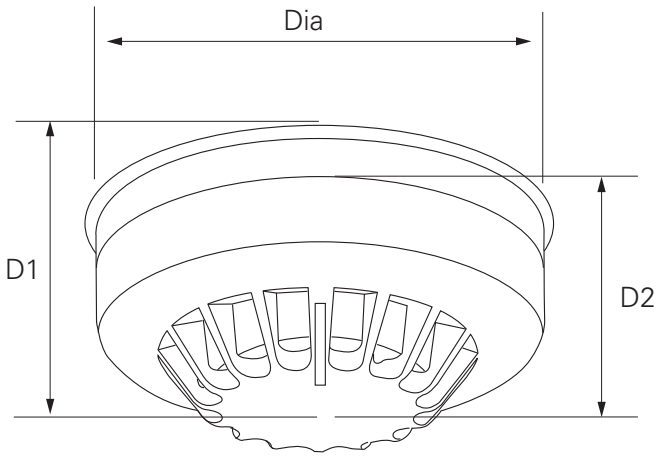

Dia (mm)	D1 (mm)	D2 (mm)
104	55	42

Eaton product datasheet
Detector range for BiWire systems

Performance

Feature	Optical smoke mode	Photo-thermal mode	Rate of rise mode	Fixed heat 77 ˚C mode	Fixed heat 92 ˚C mode
Area coverage (subject to local standards)	100m2	100m2	50m2	50m2	50m2
Heat class	N/A	A2S	A1R	BS	CS
Alarm temperature	N/A	60 ˚C	60 ˚C	77 ˚C	92 ˚C

Installation

- Detectors are fixed and wired via common mounting base.
- Cable entry into base can be rear or side.
- A locking facility is provided which can be activated if required to prevent unauthorised detector removal without the use of a special tool.
- Positive click mechanism incorporated to provide clear indication when detector is correctly located in base.

User interface

- Red LED to indicate alarm condition.
- Amber LED to indicate chamber fault/drift compensation limit.
- All wiring connections are via a common mounting base (supplied separately).

Catalogue numbers

Description	Code
Detector 5 in 1	EFBW5IN1DET
Optical detector	EFBWOPTDET
Standard base	EFXN520

Powering Business Worldwide

Eaton
Eaton Electrical Systems Ltd.
Wheatley Hall Road
Doncaster
South Yorkshire
DN2 4NB
United Kingdom

© 2021 Eaton
All Rights Reserved
Printed in UK
Publication No.TD-EN-450-0221
February 2021

Eaton is a registered trademark.

All other trademarks are property of their respective owners.