Brand of NTN corporation

Technical data

UCP326

Bearing units



Grey cast housing, radial insert ball bearing with socket set screws,seal with slinger

KIT CONTENT

UC326G2, P326

VISUAL (S)

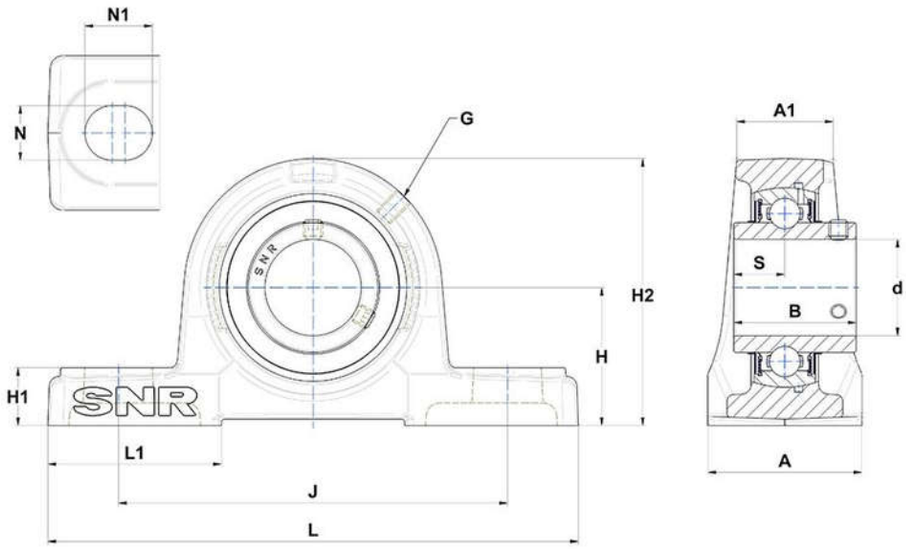

PRODUCT DEFINITION

Brand	SNR
A - Housing width	140 mm
A1 - Housing top width	94 mm
B - Width of Inner Ring	135 mm
d - Shaft diameter	130 mm
G - Grease fitting	M10x1

PRODUCT DEFINITION	
H - Distance mounting base to centerline spheric. seating diam.	180 mm
H1 - Housing foot height	75 mm
H2 - Housing height	355 mm
J - Mounting holes distance	480 mm
L - Housing length	600 mm
L1 - Housing foot length	140 mm
N - Mounting hole dimension	40 mm
N1 - Mounting hole length	55 mm
S - Distance front side/bearing centre	54 mm

PRODUCT PERFORMANCE	
C - Dynamic load rating	252000000 mN
C0 - Static load rating	242000000 mN
Operating temperature min.	253,15 °K
Operating temperature max.	373,15 °K

OTHER FEATURES	
Mass	75 kg
Recommended tightening torque for set screw	120 N-m