THE INFORMATION CONTAINED IN THIS DRAWING IS THE SOLE PROPERTY OF L-COM, INC. ANY REPRODUCTION IN PART OR WHOLE WITHOUT THE WRITTEN PERMISSION OF L-COM, INC. IS PROHIBITED.

REVISIONS			
REV	DESCRIPTION	DATE	APPROVED
A	RELEASED	11/11/08	KB
B	ECN5050: UPDATED FORMAT. ADDED MNT BRKT. ADDED NOTES.	09/28/10	DFP
C	ECN 5374: REDRAWN TO MATCH SUPPLIER SPECS	3/9/11	D. CASTRO
D	ECN 6236 REVISED NOTE 4	06/21/12	B.PUCHASKI

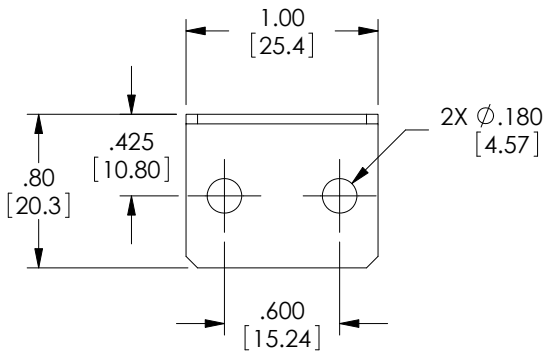

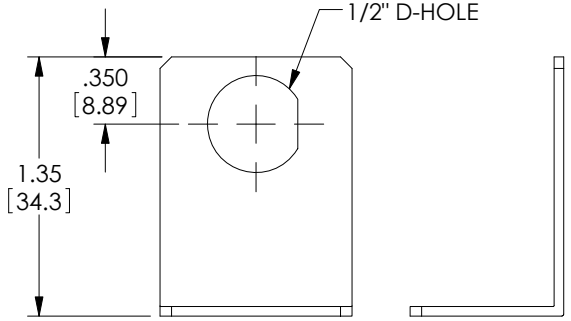

MOUNTING BRACKET

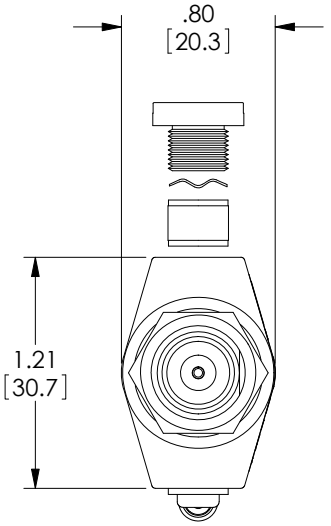

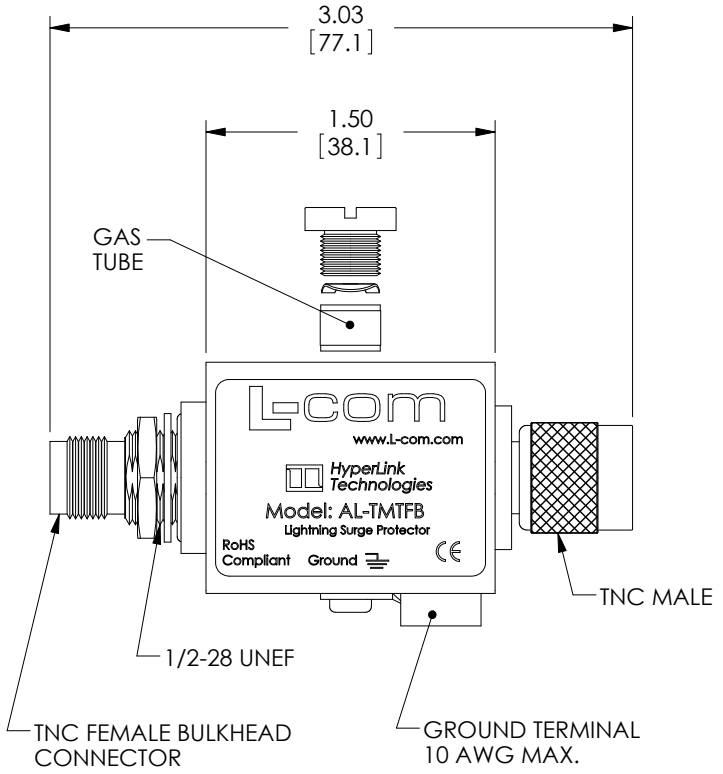

NOTE:

1. MOUNTING BRACKET MATERIAL: .05 [1.27] THK ALUMINUM

2. PROTECTOR MATERIAL:
   BODY: ALUMINUM
   CONTACT: GOLD PLATED BRASS
   INSULATOR: TEFLON

3. PACKAGE IN ACCORDANCE WITH L-COM SPECIFICATION

△D 4. FREQUENCY: 0-3GHz

UNLESS OTHERWISE SPECIFIED,
DIMENSIONS ARE IN INCHES [mm]
OVERALL CABLE LENGTH TOLERANCE:
≤12 [305] = +1 [25] / -0
>12 [305] ≤60 [1524] = +2 [51] / -0
>60 [1524] ≤120 [3048] = +4 [102] / -0
>120 [3048] ≤300 [7620] = +6 [152] / -0
>300 [7620] = +5% / -0%
ALL OTHER DIMENSIONAL TOLERANCES:
.X = ± .2
.XX = ± .02
.XXX = ±.005
PROJECTION

APPROVALS		DATE
DRAWN BY	K. BURGNER	11/11/2008
CHECKED BY	K. BURGNER	11/11/2008
APPROVED BY	K. BURGNER	11/11/2008

CONFIGURATION DETAILS OF UNDIMENSIONED FEATURES MAY VARY

COLOR VARIATIONS MAY OCCUR

L-COM Global Connectivity
45 BEECHWOOD DRIVE
NORTH ANDOVER, MA
01845

CATEGORY
LIGHTNING PROTECTOR

PRODUCT DESCRIPTION
LP,TNC-MALE TO TNC-FEMALE BLKHD

SIZE	FSCM NO.	DWG. NO.	REV.
A	43321	AL-TMTFB	D

SCALE: NONE | CAD FILE: AL-TMTFB.SLDDRW | SHEET 1 OF 1