11B63000440

THREE-POLE CONTACTOR, IEC OPERATING CURRENT IE (AC3) = 630A, AC/DC COIL, 440...480VAC/DC



Product designation			Power contactor
Product type designation			B630
Contact characteristics			
Number of poles		Nr.	3
Rated insulation voltage Ui IEC/EN		V	1000
Rated impulse withstand voltage Uimp		kV	8
Operational frequency			
	min	Hz	25
	max	Hz	400
IEC Conventional free air thermal current Ith		A	800
Operational current Ie			
	AC-1 (≤40°C)	A	800
	AC-1 (≤55°C)	A	640
	AC-1 (≤70°C)	A	540
	AC-3 (≤440V ≤55°C)	A	630
	AC-4 (400V)	A	260
Rated operational power AC-3 (T≤55°C)			
	230V	kW	198
	400V	kW	355
	415V	kW	368
	440V	kW	368
	500V	kW	368
	690V	kW	440
	1000V	kW	368
Rated operational power AC-1 (T≤40°C)			
	230V	kW	288
	400V	kW	500
	500V	kW	655
	690V	kW	860
IEC max current Ie in DC1 with L/R ≤ 1ms with 1 poles in series			
	75V	A	800
	110V	A	460
	220V	A	--
	330V	A	--
	460V	A	--
IEC max current Ie in DC1 with L/R ≤ 1ms with 2 poles in series			
	75V	A	800
	110V	A	800
	220V	A	700
	330V	A	--
	460V	A	--
IEC max current Ie in DC1 with L/R ≤ 1ms with 3 poles in series			
	75V	A	800
	110V	A	800
	220V	A	800

The characteristics described in this document are subject to updates or modifications at any time. The descriptions, technical and functional information, illustrations and instructions in this brochure are purely illustrative, and are consequently not contractually binding

	330V	A	700
	460V	A	--
IEC max current Ie in DC1 with L/R ≤ 1ms with 4 poles in series			
	75V	A	800
	110V	A	800
	220V	A	800
	330V	A	750
	460V	A	700
IEC max current Ie in DC3-DC5 with L/R ≤ 15ms with 1 poles in series			
	75V	A	800
	110V	A	460
	220V	A	--
	330V	A	--
	460V	A	--
IEC max current Ie in DC3-DC5 with L/R ≤ 15ms with 2 poles in series			
	75V	A	800
	110V	A	800
	220V	A	700
	330V	A	--
	460V	A	--
IEC max current Ie in DC3-DC5 with L/R ≤ 15ms with 3 poles in series			
	75V	A	800
	110V	A	800
	220V	A	800
	330V	A	650
	460V	A	--
IEC max current Ie in DC3-DC5 with L/R ≤ 15ms with 4 poles in series			
	75V	A	800
	110V	A	800
	220V	A	800
	330V	A	650
	460V	A	700
Short-time allowable current for 10s (IEC/EN60947-1)		A	5040
Protection fuse			
	gG (IEC)	A	1000
	aM (IEC)	A	630
Making capacity (RMS value)		A	6300
Breaking capacity at voltage			
	440V	A	6300
	500V	A	5600
	690V	A	5000
Resistance per pole (average value)		mΩ	0.14
Power dissipation per pole (average value)			
	Ith	W	90
	AC3	W	56
Tightening torque for terminals			
	min	Nm	55
	max	Nm	55
	min	lbin	40.6
	max	lbin	40.6
Tightening torque for coil terminal			
	min	Nm	1
	max	Nm	1

The characteristics described in this document are subject to updates or modifications at any time. The descriptions, technical and functional information, illustrations and instructions in this brochure are purely illustrative, and are consequently not contractually binding

		min	Ibin	0.74
		max	Ibin	0.74
Max number of wires simultaneously connectable			Nr.	2
Conductor section				
	AWG/Kcmil			
		max		2x 600 kcmil
Power terminal protection according to IEC/EN 60529				IP00
Mechanical features				
Operating position				
		normal		Vertical plan
		allowable		±30°
Fixing				Screw
Weight			g	1840
Conductor section				
	AWG/kcmil conductor section			
		max		2x 600 kcmil
Operations				
Mechanical life			cycles	5000000
Electrical life			cycles	700000
Safety related data				
Performance level B10d according to EN/ISO 13489-1				
		rated load	cycles	700000
		mechanical load	cycles	5000000
Mirror contats according to IEC/EN 609474-4-1				yes
EMC compatibility				yes
AC coil operating				
Rated AC voltage at 50/60Hz, 60Hz				
		min	V	440
		max	V	415
AC operating voltage				
	of 50/60Hz coil powered at 50Hz			
	pick-up			
		min	%Us	80
		max	%Us	110
	drop-out			
		min	%Us	20
		max	%Us	60
	of 50/60Hz coil powered at 60Hz			
	pick-up			
		min	%Us	80
		max	%Us	110
	drop-out			
		min	%Us	20
		max	%Us	60
	of 60Hz coil powered at 60Hz			
	pick-up			
		min	%Us	80
		max	%Us	110
	drop-out			
		min	%Us	20
		max	%Us	60
AC average coil consumption at 20°C				
	of 50/60Hz coil powered at 50Hz			

The characteristics described in this document are subject to updates or modifications at any time. The descriptions, technical and functional information, illustrations and instructions in this brochure are purely illustrative, and are consequently not contractually binding

		in-rush	VA	400
		holding	VA	18
	of 50/60Hz coil powered at 60Hz			
		in-rush	VA	400
		holding	VA	18
Dissipation at holding ≤20°C 50Hz			W	18
DC coil operating				
DC rated control voltage				
		min	V	440
		max	V	415
DC operating voltage				
	pick-up			
		min	%Us	80
		max	%Us	110
	drop-out			
		min	%Us	20
		max	%Us	60
Average coil consumption ≤20°C				
		in-rush	W	400
		holding	W	18
Max cycles frequency				
Mechanical operation			cycles/h	1200
Operating times				
Average time for Us control				
	in AC			
		Closing NO		
		min	ms	110
		max	ms	180
		Opening NO		
		min	ms	60
		max	ms	100
	in DC			
		Closing NO		
		min	ms	110
		max	ms	180
		Opening NO		
		min	ms	60
		max	ms	100
UL technical data				
General USE				
	Contactor			
		AC current	A	800
Short-circuit protection fuse, 600V				
	Standard fault			
		Short circuit current	kA	18
		Fuse rating	A	1500
		Fuse class		L
Ambient conditions				
Temperature				
	Operating temperature			
		min	°C	-50
		max	°C	70
	Storage temperature			
		min	°C	-60

The characteristics described in this document are subject to updates or modifications at any time. The descriptions, technical and functional information, illustrations and instructions in this brochure are purely illustrative, and are consequently not contractually binding

	max	°C	80
Max altitude		m	3000

Resistance & Protection

Pollution degree			3

Dimensions

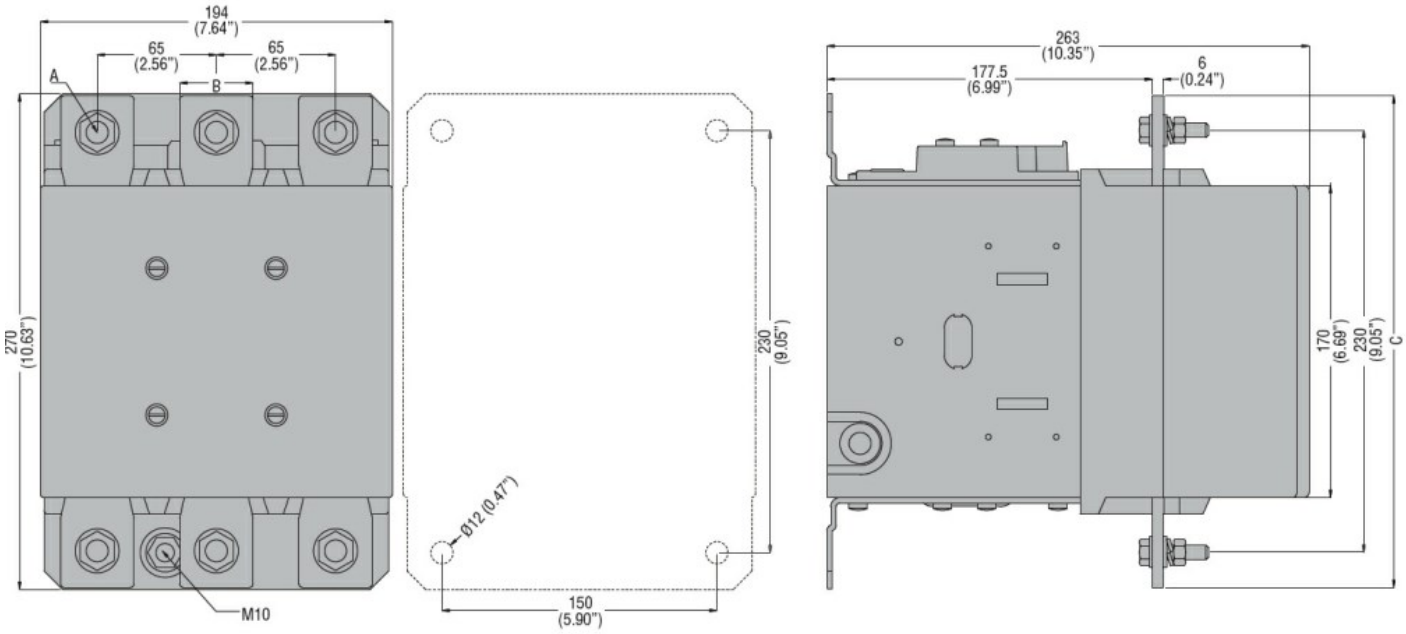

CONTACTOR TYPE	A	B	C
B500	M10	35 (1.38")	265 (10.43")
B630	M12	40 (1.57")	270 (10.63")

Wiring diagrams

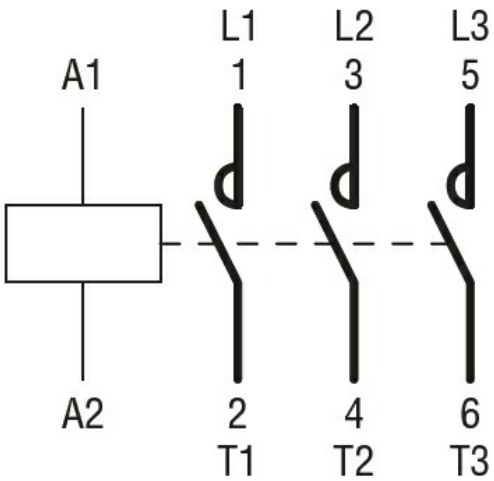

Certifications and compliance

Compliance

CSA C22.2 n° 60947-1
CSA C22.2 n° 60947-4-1
IEC/EN 60947-1
IEC/EN 60947-4-1
UL 60947-1
UL 60947-4-1

Certificates

CCC

The characteristics described in this document are subject to updates or modifications at any time. The descriptions, technical and functional information, illustrations and instructions in this brochure are purely illustrative, and are consequently not contractually binding

	cULus
	EAC

ETIM classification

ETIM 8.0	EC000066 - Power contactor, AC switching

The characteristics described in this document are subject to updates or modifications at any time. The descriptions, technical and functional information, illustrations and instructions in this brochure are purely illustrative, and are consequently not contractually binding