128, av. du Maréchal-de-Lattre-de-Tassigny - 87045 LIMOGES Cedex
Tel: +33(0)5 55 06 87 87 Fax: +33(0)5 55 06 88 88
www.legrand.com

Cat. No(s): 0 904 71 - 0 904 75 - 0 904 76 - 0 904 78

2 P+E socket outlets - French/Belgian standard
IP 66 - IK 08

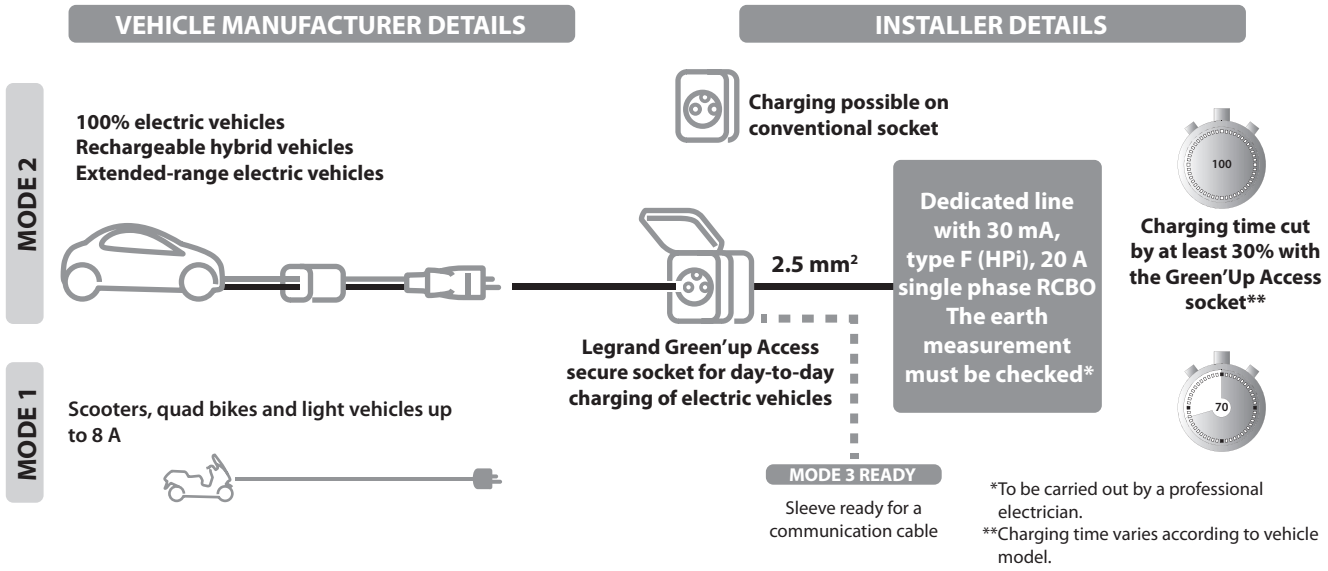

Check with your car manufacturer for the availability of a charging cord compatible with the Green'up system.

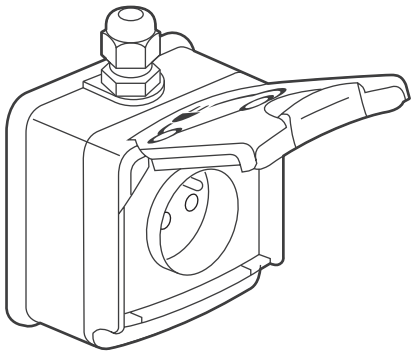

0 904 71

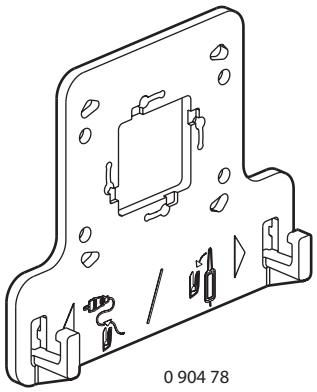

0 904 78

1. USE

3.7 kW, modes 1 and 2, 2 P+E, 16 A, 230 V, French/Belgian standard socket outlet with safety shutters.
- For safe day-to-day charging of electric vehicles supplied in modes 1 and 2 (charging on a domestic socket).
- Cost-effective, safe 2 P+E socket certified for all electric vehicles (mode 1 and mode 2). Equipped with optimised connection terminals, metal contacts with silver surface treatment (5 µm). Equipped with **Green'up System, a Legrand technology**.
- **Patented Green'up System:** the EV detects the secure **Green'up Access** infrastructure and selects the maximum power that can be supplied via the socket (reduced charging time).
- Suitable for private houses and workplaces.
- It is connected from the electrical panel via a dedicated line (1 line per socket) with protection via a 30 mA - 20 A type F (HPi) RCBO.

Bus cable Cat. No. 0 492 31 can be used as an option to migrate to the Green'Up Premium communication terminal (full mode 3 ready).

2. RANGE

Description	Cat. No.
2 P+E socket outlet - surface mounted Equipped with an ISO 20 cable gland on the socket outlet and an ISO 20 plug which is not fitted. Supplied with bracket Cat. No. 0 904 78.	0 904 71
3.7 kW charging station - mode 2 - single phase - screw connection 230 V Base equipped with a 2 P+E reinforced socket outlet with safety shutters for 2 P+E (mode 2) plug and a suspension bracket for the charging cable control box.	0 904 75
Ready to install, comprising: - 1 Green'Up Access socket Cat. No. 0 904 71 - 1 bracket Cat. No. 0 904 78 - 1 x 30 mA RCBO Cat. No. 4 107 54	0 904 76
Bracket with hooks For suspending the control box	0 904 78

2 P+E socket outlets - French/Belgian standard
IP 66 - IK 08

3. POSITIONING

■ 3.1 Fixing

The box is fixed onto the support frame using 2 (or 4) Ø 4 to 4.5 mm screws IP 66 weatherproof fixing for all surfaces.

ISO 20 - 1000 R02V cable
Rigid or identical flexible type

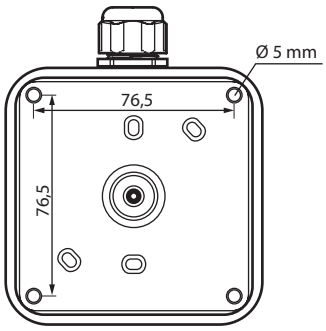

■ 3.2 Assembly

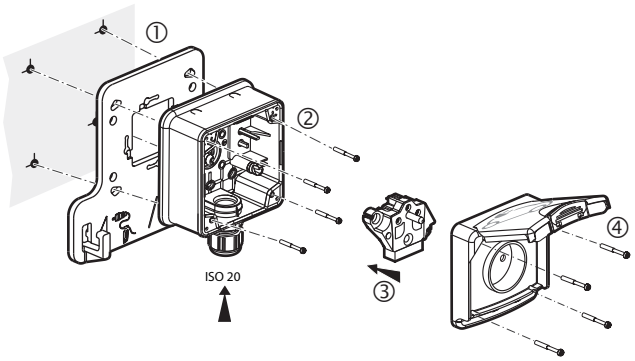

The front part (mechanism cover) is attached to the box using 4 coarse pitch screws.
(Min. tightening torque for IP 66: 0.5 Nm).

■ 3.3 Installation recommendation

MODE 1

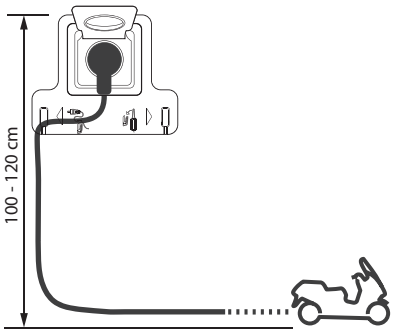

3. POSITIONING *(continued)*

■ 3.3 Installation recommendation

MODE 2

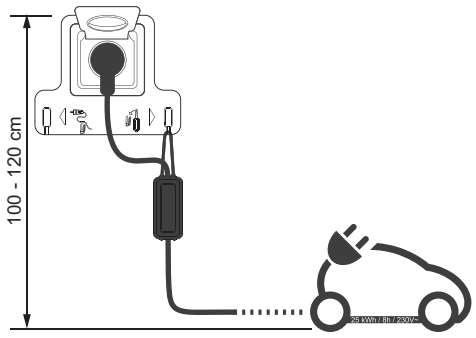

4. OVERALL DIMENSIONS (mm)

0 904 71

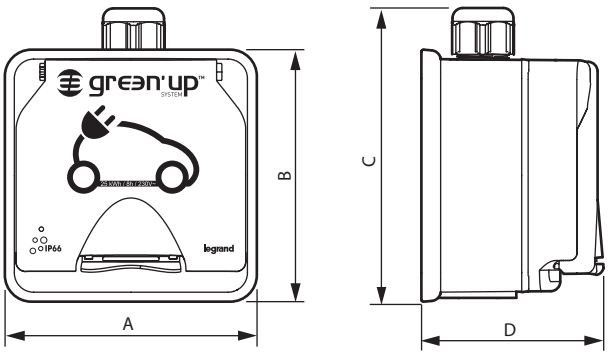

0 904 78

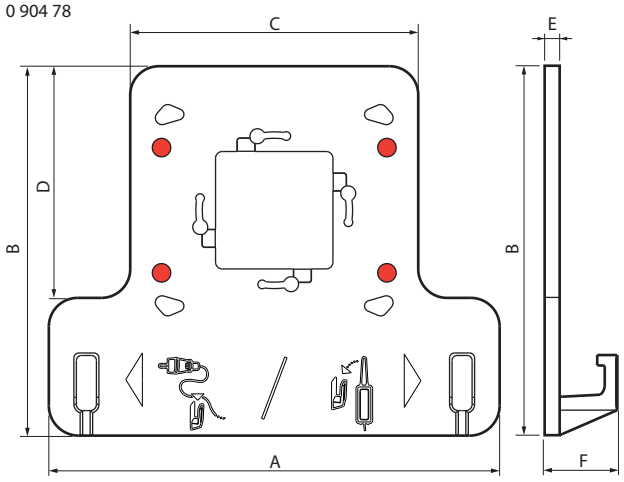

Cat. Nos	A	B	C	D	E	F
0 904 71	98	98	117	70	-	-
0 904 78	180	147.5	115	92.5	6	28

2 P+E socket outlets - French/Belgian standard
IP 66 - IK 08

4. OVERALL DIMENSIONS (mm) *(continued)*

0 904 75

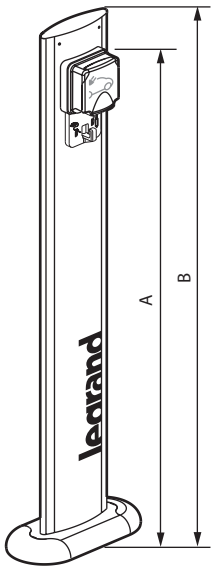

See instructions LE06018 for mounting this product

Cat. No.	A	B
0 904 75	90	100

5. CONNECTION

Pillar terminals supplied open, with screws locked in unscrewed position
Min. capacity: 1 x 1.5 mm²
Max. capacity: 1 x 6 mm² rigid or equivalent
Min. tightening torque: 0.8 Nm
Screwdriver: Flat, 3.5 to 5 mm
Phillips No. 1

■ 5.1 Installation wiring diagram

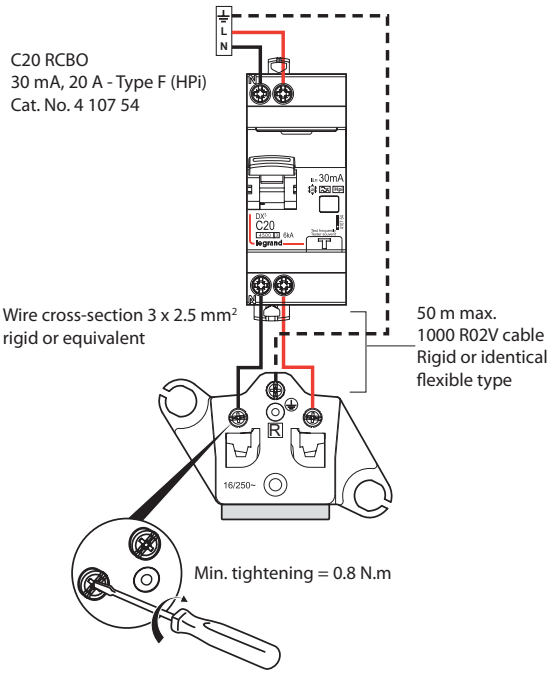

⚠ **A single socket per dedicated line**

6. TECHNICAL FEATURES

■ 6.1 Mechanical features
Impact test: IK 08
Penetration by solid/liquid matter: IP 66

■ 6.2 Materials
- Box and cover: glass fibre reinforced polypropylene, colour light grey T029
- Mechanism: polycarbonate, colour grey RAL 7016
- Cover fixing screws: stainless steel
- Seal: SEBS elastomer, colour green (anise)

UV resistance:
No noticeable change in appearance following 7-day test with ≈ 550 W/m² lighting.
(Colorimetric measurement according to laboratory).
Withstands products which are: - Chlorinated, pH 10-11
- Alkaline, pH 9-10
- Acid, pH 3

Salt spray resistance: 7 days (168 h)
Halogen-free

Self-extinguishing:
850°C/30 s for insulating components holding live parts in place.
650°C/30 s for other insulating components.

■ 6.3 Climate features
Storage and usage temperatures: - 20°C to + 40°C

■ 6.4 Electrical features
Voltage: 230 V~
Power: 3.7 kW
Current: 16 A
Frequency: 50/60 Hz

Charging all electric vehicles equipped with a mode 1 or mode 2 cable, and with batteries up to 25 kW/h capacity.

Please note:
Your installer will advise you on the most suitable electricity supply tariffs for charging your vehicle.
Always unplug the socket before starting the vehicle.
Only the cables supplied with the vehicle are authorised for use with the EV sockets.
Use of extension cables or adapters is prohibited.
The EVSE box must be suspended.
Use of a voltage surge protector is recommended.

■ 6.5 Features of charging station 0 904 75
- The innovative Green'up system provides fast, safe charging at maximum power
- Single phase - screw connection - 230 V
- Metal base (with anti-corrosion paint), smooth gloss 30% powder coating, colour RAL 7047
- IP 55 - IK 08
- Screw base, supplied with finishing strip
- For charging 1 vehicle
- Suitable for installation in private houses or commercial areas not accessible to the public
- Option of adding an additional socket (please contact us)

2 P+E socket outlets - French/Belgian standard IP 66 - IK 08

7. MAINTENANCE

Withstands high-pressure cleaning at 70 to 90 bar, at 70 to 80°C.
Surface cleaning with a dry cloth or cloth moistened with soapy water.
Do not use acetone, tar-removing cleaning agents or trichloroethylene.

8. ACCESSORIES

■ **8.3 Bracket Cat. No. 0 904 78**
Bracket with hooks
For suspending the charging cable control box.

■ **8.4 ISO 20 cable gland Cat. No. 0 980 03**
Spare part.

9. STANDARDS AND APPROVALS

Conforms to standards IEC 60884-1 and NF C 61314.
Conforms to the LCIE test programme for qualification of EV reinforced sockets: 125 8-hour charge-discharge cycles at 16 A at 230 V~.