

Image may differ from product. See technical specification for details.

# NU 2328 ECML

## Single row cylindrical roller bearing, NU design

Single row cylindrical roller bearings are designed to accommodate high radial loads in combination with high speeds. Having two integral flanges on the outer ring and no flanges on the inner ring, NU design bearings can accommodate axial displacement in both

directions. An important feature is the separable design, which facilitates mounting and enables the bearing components to be interchanged.

- High radial load carrying capacity
- Low friction
- Long service life
- Accommodate axial displacement in both directions
- Separable design

# Overview

## Dimensions

| | |
|---|---|
| Bore diameter | 140 mm |
| Outside diameter | 300 mm |
| Width | 102 mm |

## Performance

| | |
|---|---|
| Basic dynamic load rating | 1 200 kN |
| Basic static load rating | 1 430 kN |
| Reference speed | 2 400 r/min |
| Limiting speed | 4 300 r/min |
| SKF performance class | SKF Explorer |

## Properties

| | |
|---|---|
| Bearing part | Complete bearing |
| Axial displacement capability | In both directions |
| Number of rows | 1 |
| Locating feature, bearing outer ring | None |
| Bore type | Cylindrical |
| Cage | Machined metal |
| Number of flanges, outer ring | 2 |
| Number of flanges, inner ring | 0 |
| Loose flange | None |
| Radial internal clearance | CN |
| Tolerance class | Normal |
| Coating | Without |
| Sealing | Without |
| Lubricant | None |
| Relubrication feature | Without |

## Logistics

| | |
|---|---|
| Product net weight | 35.9 kg |
| eClass code | 23-05-09-01 |

| | |
|---|---|
| UNSPSC code | 31171505 |

## Technical specification

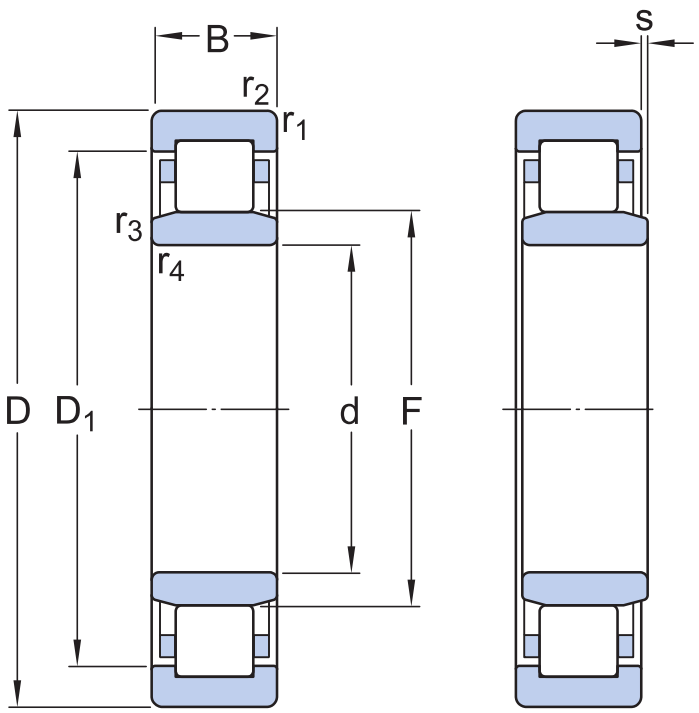


## Dimensions

| | | |
|---|---|---|
| d | 140 mm | Bore diameter |
| D | 300 mm | Outside diameter |
| B | 102 mm | Width |
| $D_1$ | ≈ 251.7 mm | Shoulder diameter of outer ring |
| F | 180 mm | Raceway diameter of inner ring |
| $r_{1,2}$ | min. 4 mm | Chamfer dimension |
| $r_{3,4}$ | min. 4 mm | Chamfer dimension |
| s | max. 9.7 mm | Permissible axial displacement |

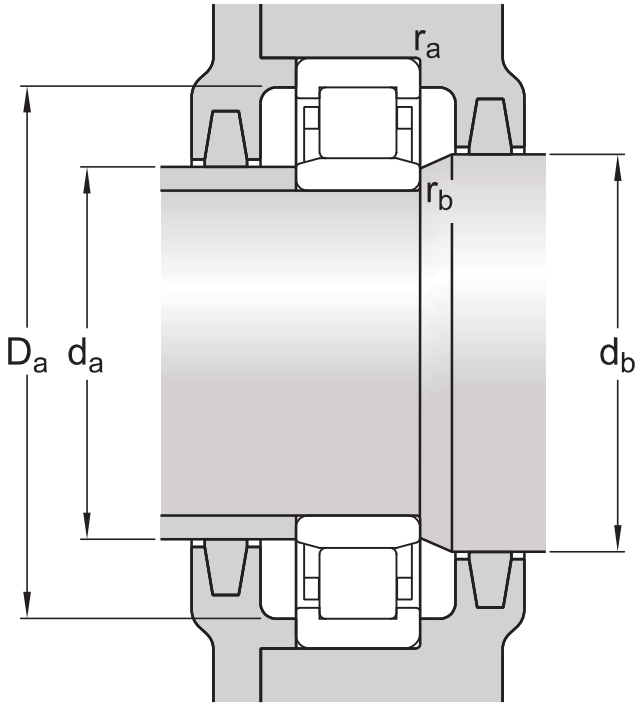


## Abutment dimensions

| | | |
|---|---|---|
| $d_a$ | min. 157 mm | Diameter of spacer sleeve |
| $d_a$ | max. 175 mm | Diameter of spacer sleeve |
| $d_b$ | min. 183 mm | Diameter of shaft abutment |
| $D_a$ | max. 282.5 mm | Diameter of housing abutment |
| $r_a$ | max. 3 mm | Radius of fillet |
| $r_b$ | max. 3 mm | Radius of fillet |

## Calculation data

| | | |
|---|---|---|
| SKF performance class | | SKF Explorer |
| Basic dynamic load rating | C | 1 200 kN |
| Basic static load rating | $C_0$ | 1 430 kN |
| Fatigue load limit | $P_u$ | 150 kN |
| Reference speed | | 2 400 r/min |
| Limiting speed | | 4 300 r/min |
| Minimum load factor | $k_r$ | 0.38 |
| Limiting value | e | 0.3 |
| Calculation factor | Y | 0.4 |

## Associated products

| | |
|---|---|
| Angle ring | HJ 2328 EC |

## Tolerances and clearances

### GENERAL BEARING SPECIFICATIONS

- Tolerances: Normal (metric), P6, Normal (inch)
- Radial internal clearance: cylindrical bore, tapered bore
- Axial internal clearance: NUP, NJ + HJ

## BEARING INTERFACES

- Seat tolerances for standard conditions
- Tolerances and resultant fit

# Compatible products

## Recommended product

| | |
|---|---|
| Angle ring (L-shaped thrust collar) for single row cylindrical roller bearings, NU or NJ design | HJ 2328 EC |

## More Information

### Product details

- Designs and variants
- General bearing specifications
- Loads
- Temperature limits
- Permissible speed
- Design considerations
- Designation system

### Engineering information

- Principles of rolling bearing selection
- General bearing knowledge
- Bearing selection process
- Bearing failure and how to prevent it

### Tools

- SimPro Quick
- SKF Product select
- Bearing Frequency Calculator
- LubeSelect for SKF greases
- Heater selection tool
- Oil Injection Method Program

# Terms of use

By accessing and using this website / app owned and published by AB SKF (publ.) (556007-3495 · Gothenburg) (“SKF”), you agree to the following terms and conditions:

**Warranty Disclaimer and Limitation of Liability**
Although every care has been taken to assure the accuracy of the information on this website / app, SKF provides this information "AS IS" and DISCLAIMS ALL WARRANTIES, EXPRESS OR IMPLIED, INCLUDING, BUT NOT LIMITED TO, IMPLIED WARRANTIES OF MERCHANTABILITY AND FITNESS FOR A PARTICULAR PURPOSE. You acknowledge that your use of this website / app is at your sole risk, that you assume full responsibility for all costs associated with use of this website / app, and that SKF shall not be liable for any direct, incidental, consequential, or indirect damages of any kind arising out of your access to, or use of the information or software made available on this website / app.

Any warranties and representations in this website / app for SKF products or services that you purchase or use will be subject to the agreed upon terms and conditions in the contract for such product or service.

Further, for non-SKF websites / apps that are referenced in our website / app or where a hyperlink appears, SKF makes no warranties concerning the accuracy or reliability of the information in these websites / apps and assumes no responsibility for material created or published by third parties contained therein. In addition, SKF does not warrant that this website / app or these other linked websites / apps are free from viruses or other harmful elements.

**Third Party Services**
When viewing YouTube content via the SKF website(s) (i.e. using YouTube API Services), you agree to be bound by the YouTube Terms of Service.

**Copyright**
Copyright in this website / app copyright of the information and software made available on this website / app rest with SKF or its licensors. All rights are reserved. All licensed material will reference the licensor that has granted SKF the right to use the material. The information and software made available on this website / app may not be reproduced, duplicated, copied, transferred, distributed, stored, modified, downloaded or otherwise exploited for any commercial use without the prior written approval of SKF. However, it may be reproduced, stored and downloaded for use by individuals without prior written approval of SKF. Under no circumstances may this information or software be supplied to third parties.

This website /app includes certain images used under license from Shutterstock, Inc.

**Trademarks and Patents**
All trademarks, brand names, and corporate logos displayed on the website / app are the property of SKF or its licensors, and may not be used in any way without prior written approval by SKF. All licensed trademarks published on this website / app reference the licensor that has granted SKF the right to use the trademark. Access to this website / app does not grant to the user any license under any patents owned by or licensed to SKF.

**Changes**
SKF reserves the right to make changes or additions to this website / app at any time.