Brand of NTN corporation

Technical data

UKP316H

Bearing units



Grey cast housing, radial insert ball bearing with adapter sleeve,seal with slinger

KIT CONTENT

UK316G2H, P316

VISUAL (S)

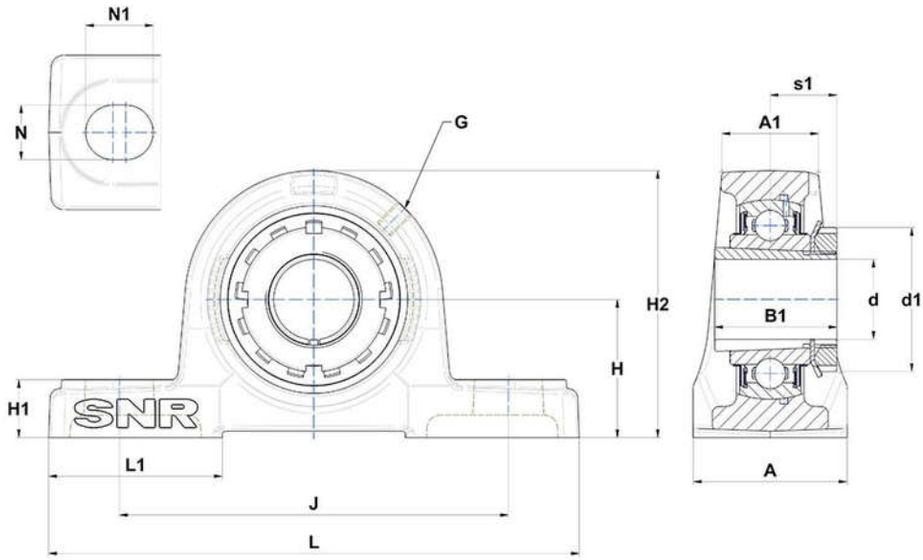

PRODUCT DEFINITION

Brand	SNR
A - Housing width	110 mm
A1 - Housing top width	66 mm
B - Width of Inner Ring	55 mm
d - Shaft diameter	70 mm
d1 - Outer dia of eccent. Lock. collar / nut of adapter sleeve	105 mm

PRODUCT DEFINITION	
G - Grease fitting	M10x1
H - Distance mounting base to centerline spheric. seating diam.	106 mm
H1 - Housing foot height	40 mm
H2 - Housing height	210 mm
J - Mounting holes distance	300 mm
L - Housing length	400 mm
L1 - Housing foot length	110 mm
N - Mounting hole dimension	27 mm
N1 - Mounting hole length	40 mm
s1 - Distance nut to middle of bearing raceway	44,5 mm

PRODUCT PERFORMANCE	
C - Dynamic load rating	122850000 mN
C0 - Static load rating	86500000 mN
Operating temperature min.	253,15 °K
Operating temperature max.	373,15 °K

OTHER FEATURES	
Mass	18,89 kg
Adapter sleeve designation	H2316