Bourdon tube pressure gauge, liquid filled
Type 213.40.0XX
Item no.: 9931082

Description	
Design according	EN 837-1
Accuracy class	class 1.6
Scale range	0...1 bar
Constructional design	
Process connection	G 1/4 B
Connector location	lower mount
Pressure element	Copper alloy
Movement	Copper alloy
Case	black forged brass with pressure vent
Nominal size	063 mm
Case filling	glycerine
pointer	Aluminium black
Window	acrylic (PMMA)
Dial	Plastic white
Operating conditions	
Pressure limitation	Steady: 3/4 x full scale value Fluctuating: 2/3 x full scale value Short time: Full scale value
Permissible ambient temperature	-20 ... +60 °C
Permissible medium temperature	+60°C maximum
Temperature effect when the temperature deviates from the reference temperature (+20°C)	Max. +-0.4 %/10 K of the span
Ingress protection	IP 65

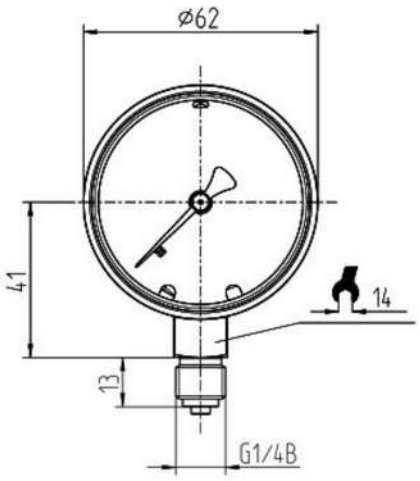

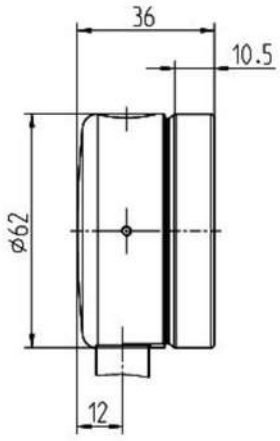

WIKA Instruments – 38 Avenue du Gros Chêne – 95220 HERBLAY
Phone0 820 95 10 10
info_fr@wika.com • http://www.wika.fr