JUMO GmbH & Co. KG
Delivery address: Mackenrodtstraße 14
36039 Fulda, Germany
Postal address: 36035 Fulda, Germany
Phone: +49 661 6003-0
Fax: +49 661 6003-607
Email: mail@jumo.net
Internet: www.jumo.net

JUMO Instrument Co. Ltd.
JUMO House
Temple Bank, Riverway
Harlow, Essex CM20 2DY, UK
Phone: +44 1279 635533
Fax: +44 1279 635262
Email: sales@jumo.co.uk
Internet: www.jumo.co.uk

JUMO Process Control, Inc.
6733 Myers Road
East Syracuse, NY 13057, USA
Phone: 315-437-5866
1-800-554-5866
Fax: 315-437-5860
Email: info.us@jumo.net
Internet: www.jumousa.com

Hygro Transducer, Hygrothermal Transducer, and CO_2 Measuring Probe for Building Management and Climate Monitoring

- **For measuring relative air humidity, temperature, and fresh air quality**
- **Available in indoor, wall-mounted, duct, and rod versions**
- **For applications in building management and in areas of climate and ventilation monitoring**
- **Option of LCD display**
- **Available with current, voltage, or Modbus output, and passive resistance output for temperature**



These capacitive humidity measuring probes are designed for the most common applications in heating, air-conditioning, and ventilation technology and stand out in particular due to their high measuring accuracy, excellent long-term stability, and good chemical resistance. The modern case concepts make for low installation costs and offer the greatest possible protection from pollutants and condensation, which in turn allows the best and most fault-free continuous operation possible.

The CO_2 measuring probes use proven infrared technology for measuring the carbon dioxide concentration. The NDIR procedure used in this has a patented auto calibration function, eliminates aging effects, and so allows accurate measurement of the CO_2 values with long-term stability.

Different combination options between the measurands carbon dioxide (CO_2), humidity (RH), and temperature (T) in visually appealing and easy-to-install cases once again set new standards in heating, air-conditioning, and ventilation technology, as well as in many other areas in which relevant measurement technology is used. This series enables a broad spectrum of uses in indoor, wall-mounted, duct, and rod versions.

Standardized current or voltage signals are available as outputs, and for some devices passive resistance outputs as well as a digital output are also available as an option. Measuring probes in indoor and wall-mounted versions can be equipped with a digital display. Furthermore a battery-operated tabletop and wall-mounted indicator is the ideal and cost-effective solution if just a simple display is needed.

Depending on the particular version and design type, applications exist across practically the entire building management sector, and in all areas of air-conditioning and ventilation technology.

Areas of application: humidification and de-humidification plants, accommodation and office areas, public buildings, agriculture and stables, incubators, drying chambers, greenhouses, storage rooms and cold stores, production halls, indoor swimming pools, etc.

JUMO GmbH & Co. KG
Delivery address: Mackenrodtstraße 14
36039 Fulda, Germany
Postal address: 36035 Fulda, Germany
Phone: +49 661 6003-0
Fax: +49 661 6003-607
Email: mail@jumo.net
Internet: www.jumo.net

JUMO Instrument Co. Ltd.
JUMO House
Temple Bank, Riverway
Harlow, Essex CM20 2DY, UK
Phone: +44 1279 635533
Fax: +44 1279 635262
Email: sales@jumo.co.uk
Internet: www.jumo.co.uk

JUMO Process Control, Inc.
6733 Myers Road
East Syracuse, NY 13057, USA
Phone: 315-437-5866
1-800-554-5866
Fax: 315-437-5860
Email: info.us@jumo.net
Internet: www.jumousa.com

Technical data

Humidity (RH)

Humidity sensor	Capacitive, can take condensation (with sensor coating)	
Humidity measuring range	0 to 100 % RH	
Humidity working range	10 to 90 % RH:	Tabletop and wall-mounted indicator, indoor version
	10 to 95 % RH:	Wall-mounted and duct version (HVAC)
	0 to 100 % RH:	Wall-mounted and duct version, rod version
Humidity accuracy at 20 °C	±2 % RH:	Indoor version and display unit in the humidity range of 40 to 60 % RH, wall-mounted and duct version in the humidity range of 0 to 90 % RH, rod version with Modbus output, (in the remaining range ±3 % RH)
	±2.5 % RH:	Wall-mounted and duct version (HVAC), rod version (for DC 24 V, 20 °C and 0.2 m/s)
	±3 % RH:	Indoor version with CO_2 in the humidity range of 30 to 70 % RH, (in the remaining range ±5 % RH)
Temperature dependency	±0.03 % RH/°C (typical)	
Sensor coating	Sensor coating for the humidity sensor is an additional protective coating, which offers better protection from contaminants for the humidity sensor and in many cases allows for longer service life, especially with particularly contaminated or aggressive atmospheres. With the exception of the indoor version, all devices are equipped with this feature for increased protection as standard.	

Temperature (T)

Temperature sensor	Platinum-chip temperature sensor Pt1000 according to DIN EN 60751, (passive also Pt100)	
Temperature measuring range	0 to 50 °C:	Indoor version; wall-mounted and duct version (HVAC) and (CO_2)
	-5 to +55 °C:	Tabletop and wall-mounted indicator
	-40 to +80 °C:	Wall-mounted and duct version (observe admissible ambient temperature)
	-40 to +60 °C:	Rod version (-40 to +80 °C with Modbus output)
Temperature accuracy at 20 °C	±0.2 °C:	Wall-mounted and duct version, rod version with Modbus output (±0.6 °C in the end range at 20 °C)
	±0.3 °C:	Indoor version – voltage output, duct version (CO_2)
	±0.4 °C:	Indoor version – current output (±0.7 °C with CO_2)
	±0.3 °C:	Wall-mounted and duct version (HVAC); rod version, tabletop and wall-mounted indicator

Carbon dioxide (CO_2)

Measuring principle	NDIR (non-dispersive infrared technology)
Sensor	2-beam infrared cells
Measuring range	0 to 2000 ppm, 0 to 5000 ppm
	0 to 10000 ppm (only wall-mounted and duct version)
Accuracy at 25 °C and 1013 mbar	±(50 ppm +2 % of the measured value) for 0 to 2000 ppm
	±(50 ppm +3 % of the measured value) for 0 to 5000 ppm
	±(100 ppm +5 % of the measured value) for 0 to 10000 ppm
Temperature dependency	2 ppm CO_2/°C (typical)
Long-term stability	20 ppm/a (typical)
Sampling rate	Approx. 15 s
Response time	< 195 s (300 s for wall-mounted version)
Warm-up time	< 5 min

JUMO GmbH & Co. KG
Delivery address: Mackenrodtstraße 14
36039 Fulda, Germany
Postal address: 36035 Fulda, Germany
Phone: +49 661 6003-0
Fax: +49 661 6003-607
Email: mail@jumo.net
Internet: www.jumo.net

JUMO Instrument Co. Ltd.
JUMO House
Temple Bank, Riverway
Harlow, Essex CM20 2DY, UK
Phone: +44 1279 635533
Fax: +44 1279 635262
Email: sales@jumo.co.uk
Internet: www.jumo.co.uk

JUMO Process Control, Inc.
6733 Myers Road
East Syracuse, NY 13057, USA
Phone: 315-437-5866
1-800-554-5866
Fax: 315-437-5860
Email: info.us@jumo.net
Internet: www.jumousa.com

Electrical data

Voltage supply	2× DC 1.5 V alkaline batteries:	Tabletop and wall-mounted indicator
	DC 15 to 35 V, AC 24 V ±20 %:	For output of 0 to 10 V / RS485 or CO_2 measuring probe
	DC 20 to 28 V:	For output of 4 to 20 mA
	DC 20 to 35 V:	For output of 4 to 20 mA (HVAC)
	DC 4.5 to 30 V:	Only rod version with voltage output
	DC 9 to 28 V:	Only rod version with current output
	DC 4 to 18 V:	Only rod version with Modbus output
Current consumption	5 to 15 mA for DC voltage supply (wall-mounted and duct version)	
	13 to 25 mA for AC voltage supply (wall-mounted and duct version)	
	1.5 mA for rod version (typical 0.4 mA for Modbus output, sampling rate 1 s)	
	10 mA plus output current, max. 0.5 A for 0.3 s for CO_2 measuring probe	
Load resistance	R_L < 500 ohm with current output	
Output signals	4 to 20 mA and 0 to 1 V, 0 to 10 V, passive also Pt100 and Pt1000 RS485 digital output (basic types see order details)	
Electromagnetic compatibility	EN 61326-1 and EN 61326-2-3	
Connection	Screw terminals max. 1.5 mm^2	
Connection diagram	See operating manual	

Case

Case	Polycarbonate	
Protection type	IP20: indoor version, tabletop and wall-mounted indicator	
	IP65: wall-mounted, duct and rod version	
Cable entry	M16 × 1.5 wall-mounted and duct version	
Ambient temperature	-20 to +60 °C:	Indoor version, wall-mounted and duct version (CO_2)
	-5 to +55 °C:	Indoor version with LCD display, tabletop and wall-mounted indicator
	-15 to +60 °C:	Wall-mounted and duct version (HVAC)
	-40 to +60 °C:	Wall-mounted and duct version (-20 to +50 °C with LCD display)
	-40 to +60 °C:	Rod version
Storage temperature	-20 to +60 °C:	Indoor version
	-25 to +60 °C	Wall-mounted and duct version (HVAC)
	-40 to +60 °C	Wall-mounted, duct and rod version
Weight	Approx. 100 g:	Indoor version and tabletop and wall-mounted indicator
	Approx. 150 g:	Wall-mounted version
	Approx. 250 g:	Duct version
	Approx. 150 g:	Rod version (1.5 m connecting cable, standard)
	Approx. 180 g:	Rod version (3 m connecting cable)

JUMO GmbH & Co. KG
Delivery address: Mackenrodtstraße 14
36039 Fulda, Germany
Postal address: 36035 Fulda, Germany
Phone: +49 661 6003-0
Fax: +49 661 6003-607
Email: mail@jumo.net
Internet: www.jumo.net

JUMO Instrument Co. Ltd.
JUMO House
Temple Bank, Riverway
Harlow, Essex CM20 2DY, UK
Phone: +44 1279 635533
Fax: +44 1279 635262
Email: sales@jumo.co.uk
Internet: www.jumo.co.uk

JUMO Process Control, Inc.
6733 Myers Road
East Syracuse, NY 13057, USA
Phone: 315-437-5866
1-800-554-5866
Fax: 315-437-5860
Email: info.us@jumo.net
Internet: www.jumousa.com

Accessories

Filters	**Plastic-grid membrane filter "HA010101"** (standard)**:** For low to normal contamination levels in the area of heating, ventilation, and air-conditioning. Pore size 1 µm, $t_{10/90}$ approx. 15 s
	Stainless steel sinter filter "HA010103": Most positive effects for high mechanical and thermic stresses. Unsuitable for high-humidity range. Pore size 10 µm, $t_{10/90}$ approx. 30 s
	Plastic-grid power-line filter "HA010106": With high humidity, danger of condensation, or rapidly changing humidity cycles. For average contamination level. Pore size 100 µm, $t_{10/90}$ approx. 7 s
	PTFE filter "HA010105": For high chemical resistance. Pore size 50 µm, $t_{10/90}$ approx. 14 s
Humidity sensor checks	Humidity sensor checks can be used to test the accuracy of humidity measuring probes. The test procedure is described in DIN 50008, IEC publication 260, ISO /R 483-1966. The basic principle consists of an appropriate climate being produced above an aqueous, saturated salt solution. Humidity sensor checks with values of 33 % RH, 53 % RH, and 76 % RH are available from stock.

JUMO GmbH & Co. KG
Delivery address: Mackenrodtstraße 14
36039 Fulda, Germany
Postal address: 36035 Fulda, Germany
Phone: +49 661 6003-0
Fax: +49 661 6003-607
Email: mail@jumo.net
Internet: www.jumo.net

JUMO Instrument Co. Ltd.
JUMO House
Temple Bank, Riverway
Harlow, Essex CM20 2DY, UK
Phone: +44 1279 635533
Fax: +44 1279 635262
Email: sales@jumo.co.uk
Internet: www.jumo.co.uk

JUMO Process Control, Inc.
6733 Myers Road
East Syracuse, NY 13057, USA
Phone: 315-437-5866
1-800-554-5866
Fax: 315-437-5860
Email: info.us@jumo.net
Internet: www.jumousa.com

Dimensions

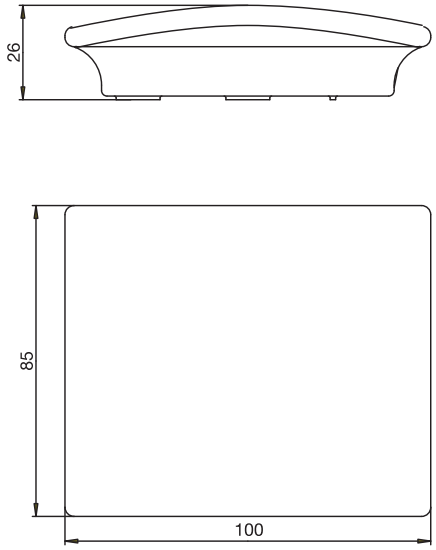

Basic type 907021/11 and 907021/80
indoor version
and basic type 907021/12
tabletop and wall-mounted indicator

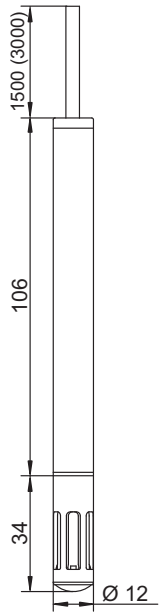

Basic type 907021/60
hygrothermal transducer, rod version with
1.5 m (3 m) connecting cable

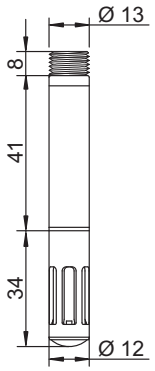

Basic type 907021/71
hygrothermal transducer, rod version
with M12 × 1-plug connector

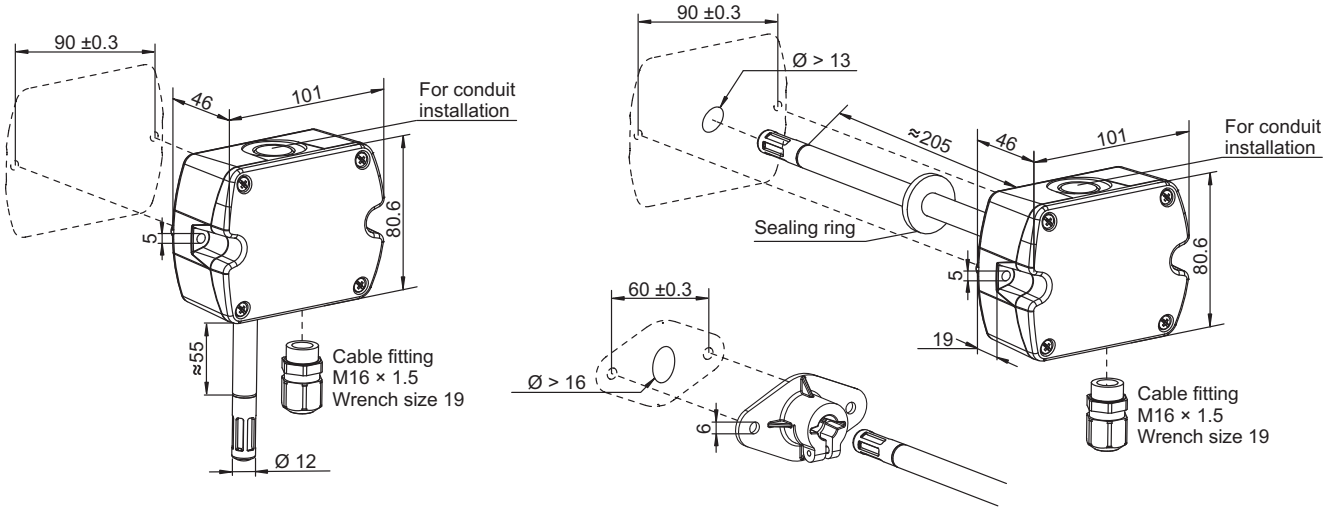

Basic type 907021/160 hygrothermal transducer, wall-mounted version (HVAC)
and basic type 907021/161 hygrothermal transducer, duct version (HVAC)

JUMO GmbH & Co. KG
Delivery address: Mackenrodtstraße 14
36039 Fulda, Germany
Postal address: 36035 Fulda, Germany
Phone: +49 661 6003-0
Fax: +49 661 6003-607
Email: mail@jumo.net
Internet: www.jumo.net

JUMO Instrument Co. Ltd.
JUMO House
Temple Bank, Riverway
Harlow, Essex CM20 2DY, UK
Phone: +44 1279 635533
Fax: +44 1279 635262
Email: sales@jumo.co.uk
Internet: www.jumo.co.uk

JUMO Process Control, Inc.
6733 Myers Road
East Syracuse, NY 13057, USA
Phone: 315-437-5866
1-800-554-5866
Fax: 315-437-5860
Email: info.us@jumo.net
Internet: www.jumousa.com

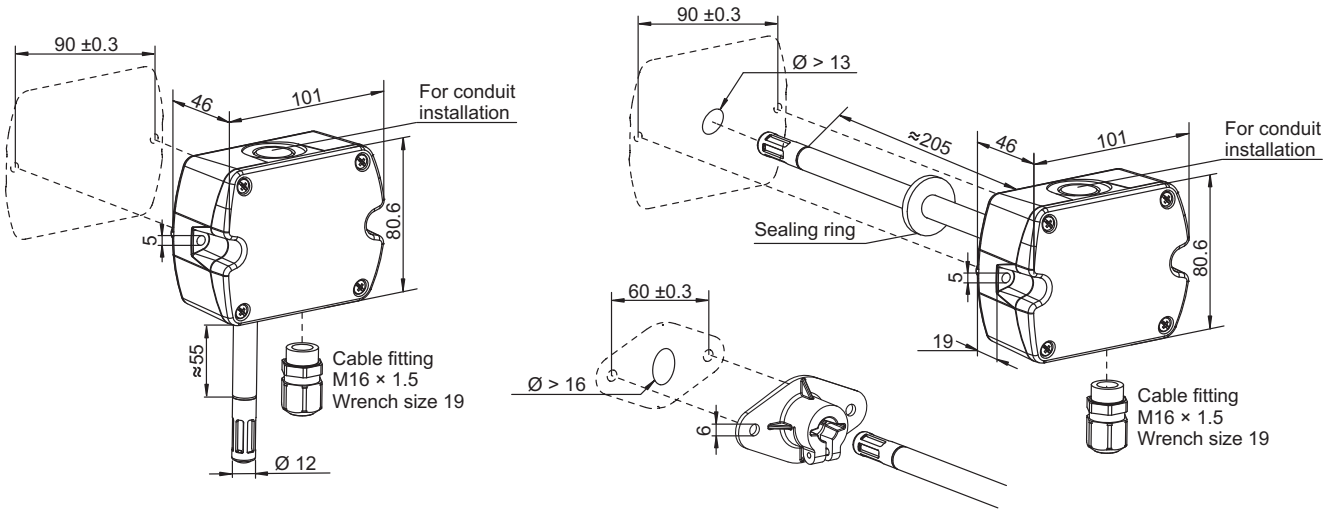

Basic type 907021/210 hygrothermal transducer, wall-mounted version and basic type 907021/211 hygrothermal transducer, duct version

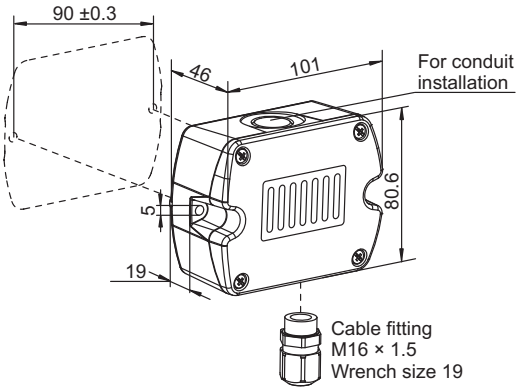

Basic type 907021/820 CO_2 measuring probe, wall-mounted version

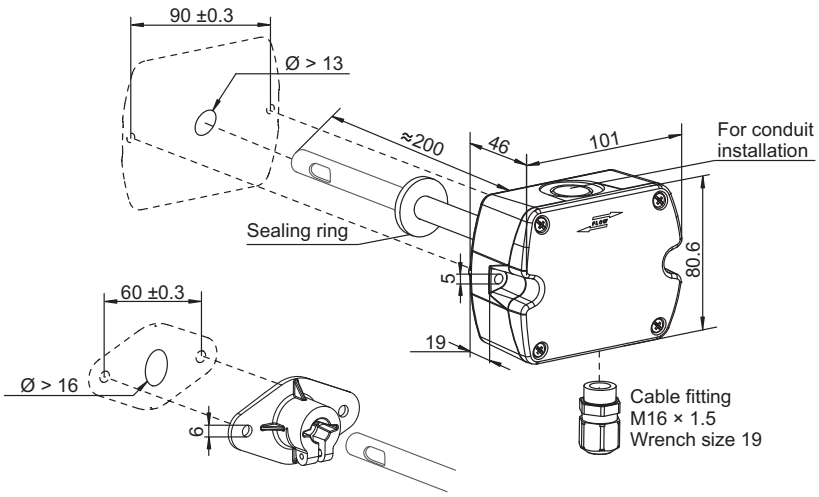

Basic type 907021/850 CO_2 measuring probe, duct version

JUMO GmbH & Co. KG
Delivery address: Mackenrodtstraße 14
36039 Fulda, Germany
Postal address: 36035 Fulda, Germany
Phone: +49 661 6003-0
Fax: +49 661 6003-607
Email: mail@jumo.net
Internet: www.jumo.net

JUMO Instrument Co. Ltd.
JUMO House
Temple Bank, Riverway
Harlow, Essex CM20 2DY, UK
Phone: +44 1279 635533
Fax: +44 1279 635262
Email: sales@jumo.co.uk
Internet: www.jumo.co.uk

JUMO Process Control, Inc.
6733 Myers Road
East Syracuse, NY 13057, USA
Phone: 315-437-5866
1-800-554-5866
Fax: 315-437-5860
Email: info.us@jumo.net
Internet: www.jumousa.com

Order details

(1) Basic type

907021/11	Hygro transducer, hygrothermal transducer, indoor version
907021/12	Hygro thermometer, tabletop and wall-mounted indicator
907021/160	Hygrothermal transducer, wall-mounted version (HVAC)
907021/161	Hygrothermal transducer, duct version (HVAC)
907021/210	Hygrothermal transducer, wall-mounted version
907021/211	Hygrothermal transducer, duct version
907021/60	Hygrothermal transducer, rod version with 1.5 m connecting cable
907021/71	Hygrothermal transducer, rod version with M12 × 1-plug connector

(2) Version

2	Humidity and temperature
3	Humidity and temperature (T passive)
9	Humidity and temperature (digital)

(3) Measuring ranges / scaling (observe admissible ambient temperature)

10	0 to 100 % RH; -20 to +80 °C
14	0 to 100 % RH; -40 to +60 °C
22	0 to 100 % RH; -30 to +70 °C
33	10 to 90 % RH; -5 to +55 °C
34	0 to 100 % RH; 0 to 50 °C
90	Digital output

(4) Output

000	None
005	4 to 20 mA / 4 to 20 mA
006	4 to 20 mA / temperature (T passive) Pt100 class A
007	4 to 20 mA / temperature (T passive) Pt1000 class A
051	0 to 1 V / 0 to 1 V
065	0 to 10 V / 0 to 10 V
066	0 to 10 V / temperature (T passive) Pt100 class A
067	0 to 10 V / temperature (T passive) Pt1000 class A
530	RS485 Modbus interface (configuration in plain text, see table "Interface parameters – digital output")

(5) Extra codes

000	None
793	Integrated LCD display (indoor version for humidity and temperature, alternating display)
794	Integrated LCD display (as extra code 793, but with temperature display in °F) (non-metric)
847	Longer connecting cable – length 3 m

	(1)		(2)		(3)		(4)		(5)
Order code		-		-		-		/	
Order example	907021/11	-	2	-	34	-	065	/	000

Interface parameters – digital output (output "530")

Protocol		Baud rate		Parity		Stop bit(s)		Unit	
Modbus	(1)	9600	(A)	odd	(O)	1 stop bit	(1)	metric	(M)
		19200	(B)	even	(E)	2 stop bits	(2)	non-metric	(N)
		38400	(C)	no parity	(N)				

Note:
Please also observe the humidity working range and the admissable ambient temperatures (see "Technical data")
A third output is only available for multi-channel devices and not always possible for all device combinations.

JUMO GmbH & Co. KG
Delivery address: Mackenrodtstraße 14
36039 Fulda, Germany
Postal address: 36035 Fulda, Germany
Phone: +49 661 6003-0
Fax: +49 661 6003-607
Email: mail@jumo.net
Internet: www.jumo.net

JUMO Instrument Co. Ltd.
JUMO House
Temple Bank, Riverway
Harlow, Essex CM20 2DY, UK
Phone: +44 1279 635533
Fax: +44 1279 635262
Email: sales@jumo.co.uk
Internet: www.jumo.co.uk

JUMO Process Control, Inc.
6733 Myers Road
East Syracuse, NY 13057, USA
Phone: 315-437-5866
1-800-554-5866
Fax: 315-437-5860
Email: info.us@jumo.net
Internet: www.jumousa.com

Order details

				(1)	**Basic type**
			907021/80		CO_2 measuring probe indoor version
			907021/820		CO_2 measuring probe wall-mounted version
			907021/850		CO_2 measuring probe duct version
				(2)	**Version**
	x	x	4		CO_2 (1-channel output)
x		x	5		CO_2 and temperature (only for duct version 0 to 10 V)
x		x	6		CO_2 and temperature (T passive)
x			7		CO_2, temperature, and humidity (only for 0 to 10 V)
				(3)	**Measuring ranges / scaling (observe admissible ambient temperature)**
x	x	x	040		0 to 2000 ppm; 0 to 50 °C; 0 to 100 % RH
x	x	x	041		0 to 5000 ppm; 0 to 50 °C; 0 to 100 % RH
	x	x	042		0 to 10000 ppm; 0 to 50 °C; 0 to 100 % RH
				(4)	**Output**
x	x	x	005		4 to 20 mA / 4 to 20 mA
x			006		4 to 20 mA / temperature (T passive) Pt100 class A
x		x	007		4 to 20 mA / temperature (T passive) Pt1000 class A
x	x	x	065		0 to 10 V / 0 to 10 V
x			066		0 to 10 V / temperature (T passive) Pt100 class A
x		x	067		0 to 10 V / temperature (T passive) Pt1000 class A
				(5)	**Extra codes**
x	x	x	000		None
x			793		Integrated LCD display (indoor version for humidity and temperature, alternating display)
x			794		Integrated LCD display (as extra code 793, but with temperature display in °F) (non-metric)

	(1)		(2)		(3)		(4)		(5)
Order code		-		-		-		/	
Order example	907021/80	-	5	-	040	-	005	/	000

Note:
A second output is only available for multi-channel devices and is not always possible with all device combinations.

JUMO GmbH & Co. KG
Delivery address: Mackenrodtstraße 14
36039 Fulda, Germany
Postal address: 36035 Fulda, Germany
Phone: +49 661 6003-0
Fax: +49 661 6003-607
Email: mail@jumo.net
Internet: www.jumo.net

JUMO Instrument Co. Ltd.
JUMO House
Temple Bank, Riverway
Harlow, Essex CM20 2DY, UK
Phone: +44 1279 635533
Fax: +44 1279 635262
Email: sales@jumo.co.uk
Internet: www.jumo.co.uk

JUMO Process Control, Inc.
6733 Myers Road
East Syracuse, NY 13057, USA
Phone: 315-437-5866
1-800-554-5866
Fax: 315-437-5860
Email: info.us@jumo.net
Internet: www.jumousa.com

Stock versions

Order code	Part no.
907021/11-2-34-005/000	00436298
907021/11-2-34-005/793	00441452
907021/12-2-33-000/000	00440647
907021/160-2-34-005/000	00630604
907021/161-2-34-005/000	00630609
907021/210-2-10-005/000	00630616
907021/210-2-14-005/000	00630624
907021/210-2-14-005/793	00630630
907021/211-2-10-005/000	00630646
907021/211-2-14-005/000	00630790
907021/60-2-14-051/000	00630791
907021/80-5-40-005/000	00578092
907021/80-5-40-005/793	00578093
907021/80-7-40-005/793	00578094
907021/820-4-41-005/000	00630792
907021/850-4-40-005/000	00630796
907021/850-6-40-007/000	00630797

Accessories

Description	Part no.
Plastic-grid membrane filter "HA010101"	00388181
Stainless steel sinter filter "HA010103"	00388183
Plastic-grid power-line filter "HA010106"	00389114
PTFE filter "HA010105"	00503575
Humidity sensor check 33 % RH	00332758
Humidity sensor check 53 % RH	00332759
Humidity sensor check 76 % RH	00332760
Mating coupling M12 × 1 for the case installation "HA010705"	00642185
Mating coupling M12 × 1 can be modified, IP67 "HA010707"	00642189
PUR extension cable M12 × 1 (shielded), length 2 m	00503577
PUR extension cable M12 × 1 (shielded), length 5 m	00503578
PUR extension cable M12 × 1 (shielded), length 10 m	00503579