Product datasheet
Characteristics

XCRB151EX
limit switch XCR - roller lever - 2NC + 2NO - ATEX/IECEx



To be discontinued

Commercial status

Discontinued on: 24 October 2020

End-of-service on: 26 October 2020

Main

Range of product	OsiSense ATEX D
Series name	Special format
Product or component type	Limit switch
Product specific application	For hoisting and mechanical handling applications
Device short name	XCR
Body type	Fixed
Head type	Rotary head
Material	Metal
Fixing mode	By the body
Movement of operating head	Rotary
Type of operator	Spring return roller lever thermoplastic large
Switch actuation	By any moving part
Type of approach	Lateral approach, 2 directions
Electrical connection	Screw-clamp terminals, clamping capacity: 1 x 0.34...2 x 1.5 mm²
Cable entry number	1 tapped entry for Pg 13.5 cable gland (included) 9…12 mm
Number of poles	4
Contacts type and composition	2 x (1 NC + 1 NO)
Contacts insulation form	Zb
Contact operation	Snap action
Number of steps	1
Contact block per direction [control circuit]	1 per direction
Positive opening	With
Minimum force for tripping	0.75 N
Minimum torque for tripping	0.45 N.m
Maximum actuation speed	1.5 m/s
IP degree of protection	IP65 conforming to IEC 60529

Complementary

Minimum actuation speed	0.01 m/min
Maximum displacement angle	55 °

Disclaimer: This documentation is not intended as a substitute for and is not to be used for determining suitability or reliability of these products for specific user applications

	-55 °
Contact code designation	A300, AC-15 (Ue = 240 V), Ie = 3 A conforming to EN 60947-5-1 A300, AC-15 (Ue = 240 V), Ie = 3 A conforming to IEC 60947-5-1 appendix A Q300, DC-13 (Ue = 250 V), Ie = 0.27 A conforming to EN 60947-5-1 Q300, DC-13 (Ue = 250 V), Ie = 0.27 A conforming to IEC 60947-5-1 appendix A
[Ui] rated insulation voltage	300 V conforming to UL 508 500 V conforming to NF C 20-040 group C 500 V (pollution degree 3) conforming to IEC 60947-1 500 V (pollution degree 3) conforming to VDE 0110
Maximum resistance across terminals	25 MOhm conforming to IEC 60255-7 category 3 25 MOhm conforming to NF C 93-050 method A
[Uimp] rated impulse withstand voltage	IEC 60664 6 kV IEC 60947-1 6 kV
Short-circuit protection	10 A cartridge fuse, type gG
Electrical durability	5000000 cycles, DC-13, inductive load type, 120 V, 4 W, operating rate <3600 cyc/mn, load factor: 0.5, DC conforming to IEC 60947-5-1 appendix C 5000000 cycles, DC-13, inductive load type, 24 V, 10 W, operating rate <3600 cyc/mn, load factor: 0.5, DC conforming to IEC 60947-5-1 appendix C 5000000 cycles, DC-13, inductive load type, 48 V, 7 W, operating rate <3600 cyc/mn, load factor: 0.5, DC conforming to IEC 60947-5-1 appendix C
Mechanical durability	10000000 cycles
Marking	II2 D-Ex tb IIIC T85°C Db IP66/67
Width	85 mm
Height	95 mm
Depth	75 mm

Environment

Shock resistance	68 gn conforming to IEC 60068-2-27
Vibration resistance	9 gn (f= 10…500 Hz) conforming to IEC 60068-2-6
Electrical shock protection class	Class I conforming to IEC 60536 Class I conforming to NF C 20-030
Ambient air temperature for operation	-20…60 °C
Protective treatment	TC
Dust zone	Zone 21 - 22
Product certifications	INERIS 04ATEX0014X IEC-Ex INE 16.0048X
Standards	EN/IEC 60079-31 EN/IEC 60079-0
Directives	2014/34/EU - ATEX directive

Packing Units

Package 1 Weight	1.096 kg

Offer Sustainability

REACh Regulation	REACh Declaration
EU RoHS Directive	Not applicable, out of EU RoHS legal scope
Environmental Disclosure	Product Environmental Profile

Contractual warranty

Warranty	18 months

Dimensions

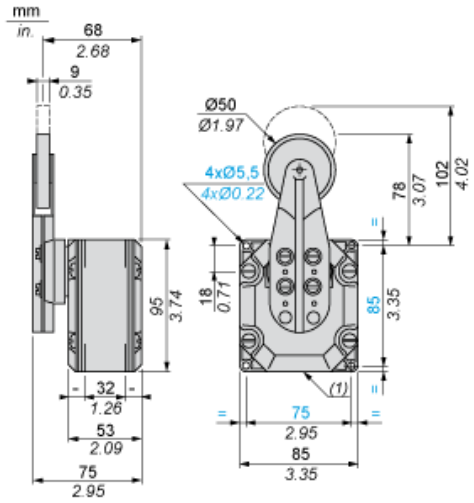

(1) 1 tapped entry for n° 13 cable gland.

Wiring Diagram

Two 2-pole NC + NO Snap Action

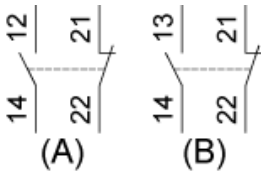

(A) 1st contact
(B) 2nd contact

Functionnal Diagram

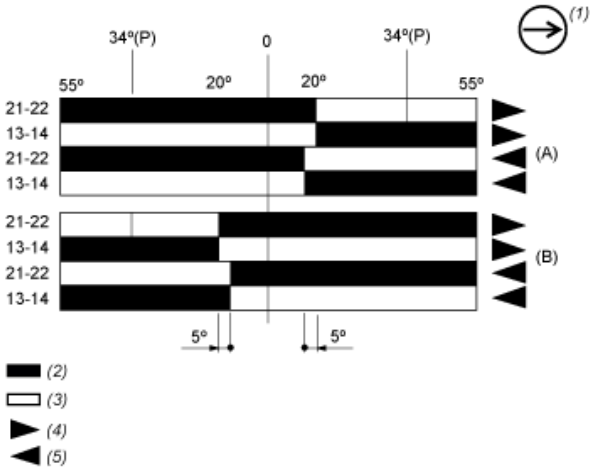

(P) Positive opening point
(A) 1st contact
(B) 2nd contact
(1) NC contact with positive opening operation
(2) Closed
(3) Open
(4) Tripping
(5) Resetting