trumeter
innovation by design

7000/7000AS

6 digit LCD electronic totalising counter



Miniature, 6 digit LCD PCB mount totalising counter designed for minimal power requirement. These miniature 6 digit totalising counters are suitable for either direct PCB mounting, or panel mounting with bezel supplied.

The 7000/7000AS can also be configured to count electro-mechanical contact closure events using an external resistor and capacitor to eliminate contact bounce. Similarly the supply voltage can be increased using an external resistor and 3V zener diode. See instruction leaflet for details.

Key Features

- Uses the latest CMOS circuitry to achieve quiescent current consumption of less than 5µA
- 6mm black character high contrast LCD display
- Bi-directional counting (7000AS model)
- Counts pulses up to 10kHz frequency
- External reset input
- CE, UL and cUL approved

trumeter
innovation by design

Specification

Supply Voltage	2.6 – 3.4VDC
Current Consumption	5uA quiescent, 10µA at 10kHz
Display	6 digit black LCD, 6mm characters with leading zero blanking
Count Range	999999 display rollover to 0
Count Input	10kHz maximum, negative edge triggered, 0.7V threshold, 50µS minimum pulse length, TTL/CMOS Compatible
Reset Input	Negative edge triggered, 0.7V threshold, 15mS minimum pulse length, TTL/CMOS Compatible
Direction Input	Add=logic 1, Subtract=logic 0 (0V)
Operating Temp	-10°C to +60°C
Storage Temp	-10°C to +60°C
Material	Clear polycarbonate
Environmental Protection	IP40/DIN40050
Weight	7.5g

Dimensions

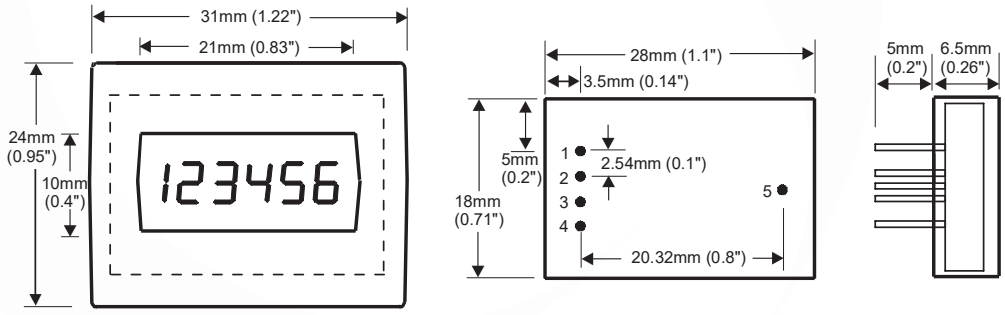

Part Numbers

7000	7000 6 Digit LCD Totalising Counter
7000AS	7000AS Bi-directional, Add/Subtract version of above



www.trumeter.com

Trumeter (Europe)
Pilot Mill
Alfred Street
Bury,
BL9 9EF
Tel: +44 161 674 0960
Email: sales.uk@trumeter.com

Trumeter (The Americas)
702 S. Military Trail
Deerfield Beach, Florida
FL 33442,
USA
Tel: +1 954 725 6699
Email: sales.usa@trumeter.com

Innovative Design Technologies Sdn. Bhd
Lot 5881, Lorong Iks Bukit Minyak 1
Taman Perindustrian Iks, 14000 Bukit Tengah
Penang, Malaysia
Web: www.idtworld.com
Tel: + 604 5015700
Email: sales.my@idtworld.com