2-stage filter for 3-phase systems

new



Description
- Terminals for three phases and ground
- High symmetrical and asymmetrical attenuation
- In the frequency range from 10kHz up to 300MHz

Standards
- IEC 60939
- UL 1283, Edition 5, CSA 22.2 No. 8-M1986, @ Ta 75 °C

Approvals
- VDE Certificate Number: 40029853
- UL File Number: E72928

Applications
- Voltage rating 480 and 520 VAC for world wide acceptance
- Protection against interference voltage from the mains
- Especially designed for industrial applications such as: Frequency Converters, Stepper Motor Drives, UPS-Systems, Inverters
- Qualified for use in equipment according IEC/EN 60950

References

Weblinks
pdf, html, General Product Information, Approvals, RoHS, CHINA-RoHS, e-Store, SCHURTER-Stock-Check, Distributor-Stock-Check

Technical Data

Rated Current	7 - 180 A
Rated voltage	480 - 520 VAC, 50/60 Hz
Approval for	7 - 180 A @ 50 (75) °C / 480/520 VAC; 50/60 Hz
Overload Current	1.5 x Ir
Dielectric Strength for 480 VAC	> 2.25 kVDC between L-L > 2.75 kVDC between L-PE
Dielectric Strength for 520 VAC	> 2.25 kVDC between L-L > 2.75 kVDC between L-PE Test voltage 2 sec
Number of Filter Stages	2
Weight	0.8 - 8 kg
Material: Housing	Metal
Sealing Compound	UL 94V-0

Mounting	Screw-on mounting on chassis
Terminal	Screw clamps
Operating Temperature [°C]	-25 °C to 100 °C
Climatic Category	25/100/21 acc. to IEC 60068-1
Degree of Protection	IP 20 acc. to IEC 60529
Protection Class	Suitable for appliances with protection class 1 acc. to IEC 61140
MTBF	> 200'000 h acc. to MIL-HB-217 F

Dimensions

Case 1U

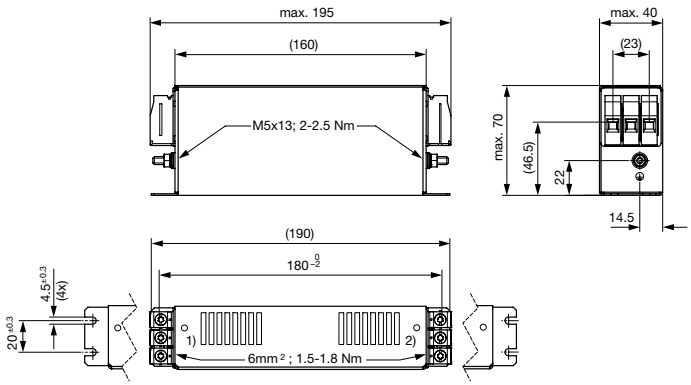

1) Line
2) Load

Case 1C

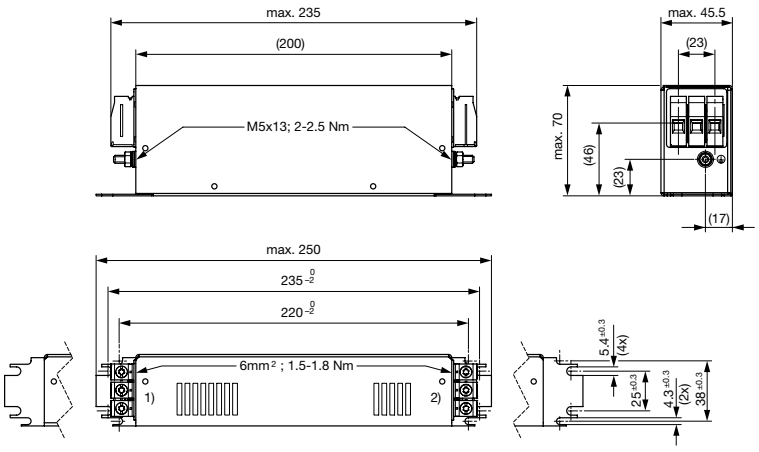

1) Line
2) Load

Case 1Q

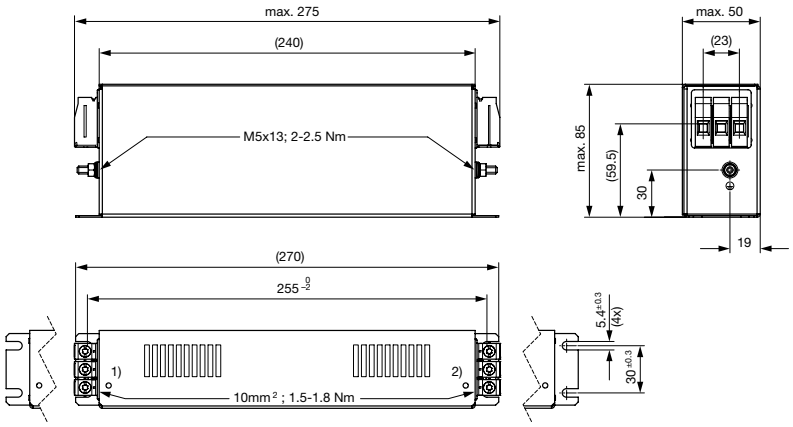

1) Line
2) Load

Case 1R

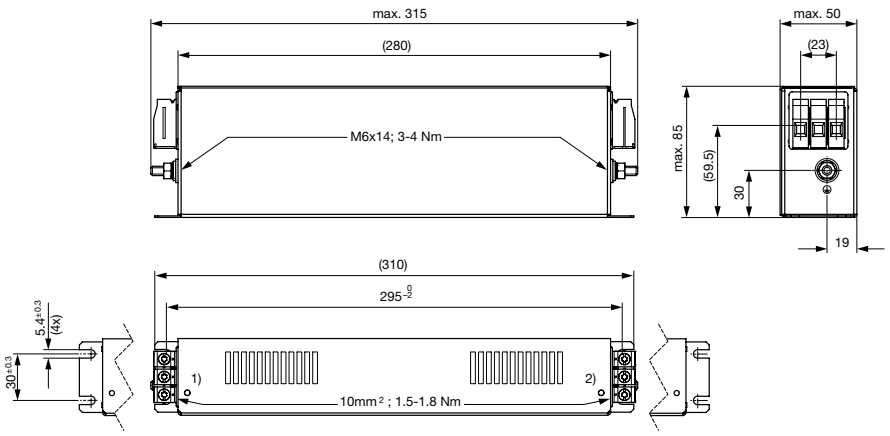

1) Line
2) Load

Case 1S

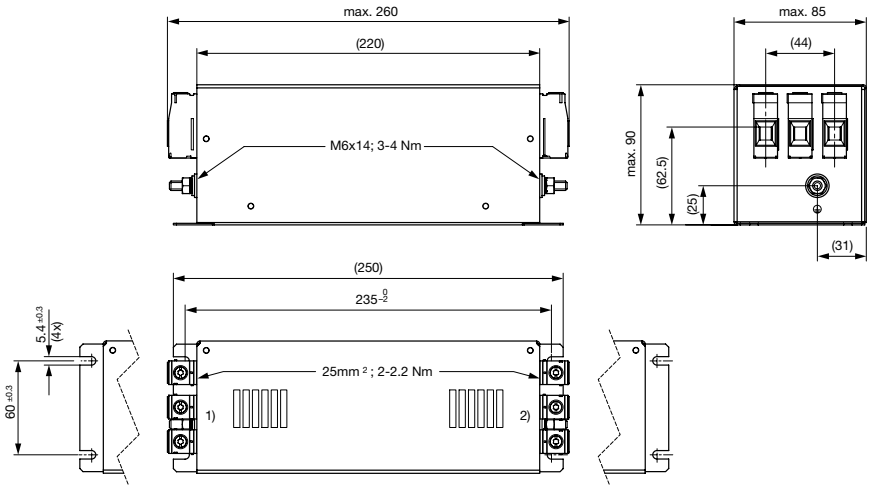

1) Line
2) Load

Case 1F

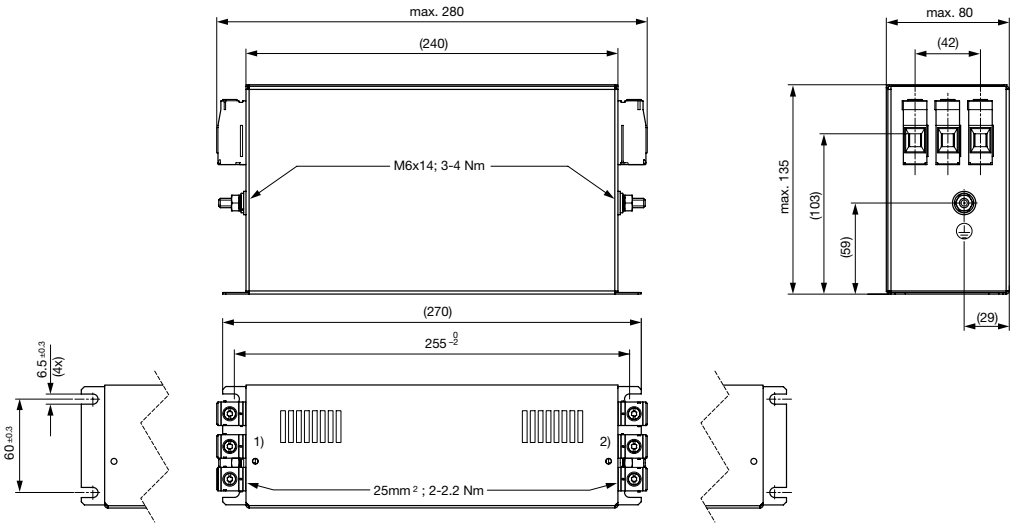

1) Line
2) Load

Case 1G

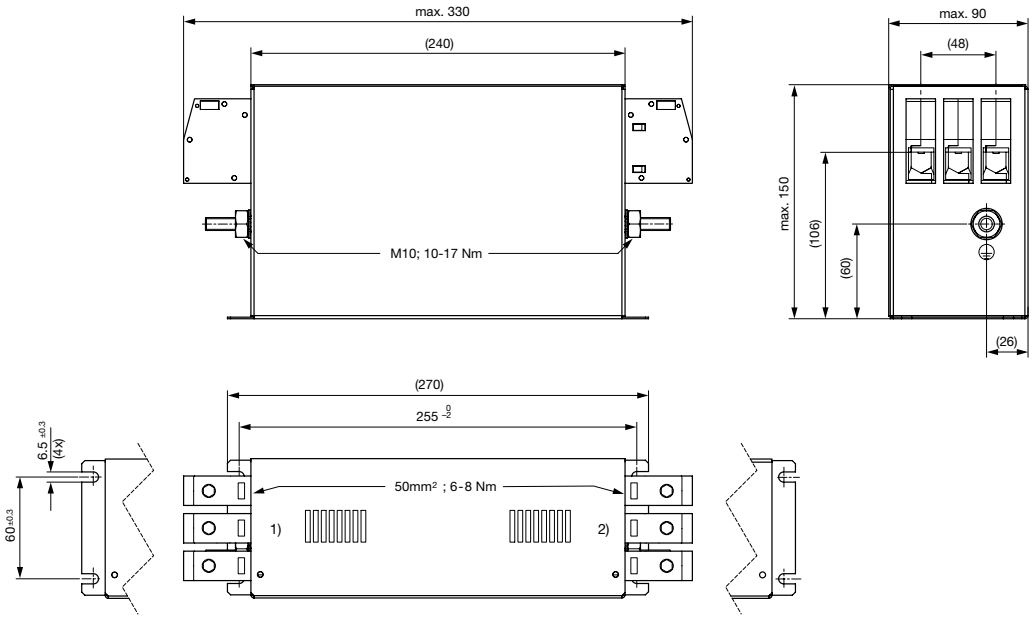

1) Line
2) Load

Case 1V

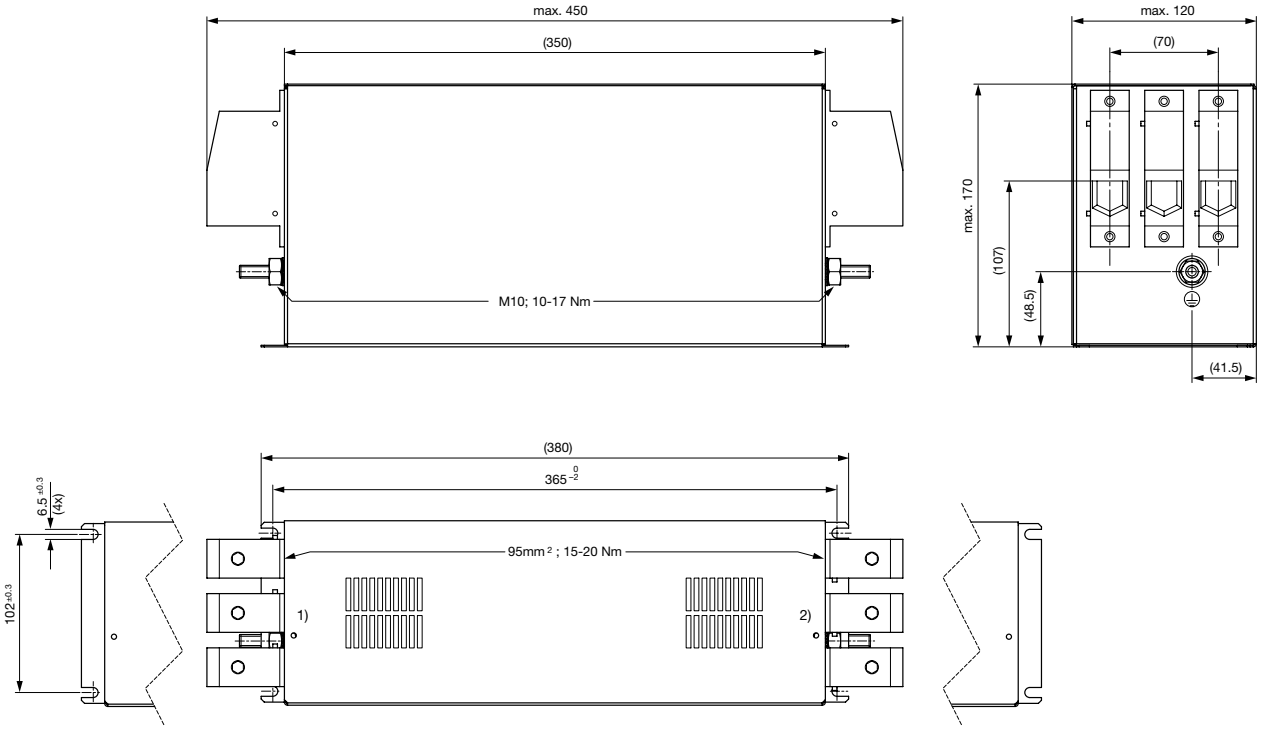

1) Line
2) Load

Technical data to the filter components

Rated Current @ Ta 50°C (75°C) [A]	L [mH]	L2 [µH]	C1 [µF]	C2 [µF]	C3 [µF]	R1 [MΩ]	R2 [MΩ]	R3 [MΩ]
7 (4.7)	2.7	5	3.3	3.3	3.3	-	1	1
16 (12)	1.9	10	6.6	3.3	3.3	1	1	1
30 (21)	1.9	10	6.8	3.3	3.3	1	1	1
42 (31)	1.3	10	9.9	3.3	3.3	1	1	1
55 (49)	1.8	13	10	3.3	3.3	1	1	1
75 (52)	1.2	13	9.9	3.3	3.3	1	1	1
100 (70)	1.2	13	9.9	3.3	3.3	1	1	1
130 (92)	0.7	26	9.9	3.3	3.3	1	1	1
180 (135)	0.4	31	10	3.3	3.3	1	1	1
7 (4.7)	2.7	5	3.3	3.3	3.3	-	1	1
16 (12)	1.9	10	6.6	3.3	3.3	1	1	1
30 (21)	1.9	10	6.8	3.3	3.3	1	1	1
42 (31)	1.3	10	9.9	3.3	3.3	1	1	1
55 (49)	1.8	13	10	3.3	3.3	1	1	1
75 (52)	1.2	13	9.9	3.3	3.3	1	1	1
100 (70)	1.2	13	9.9	3.3	3.3	1	1	1
130 (92)	0.7	26	9.9	3.3	3.3	1	1	1
180 (135)	0.4	31	10	3.3	3.3	1	1	1

Diagrams

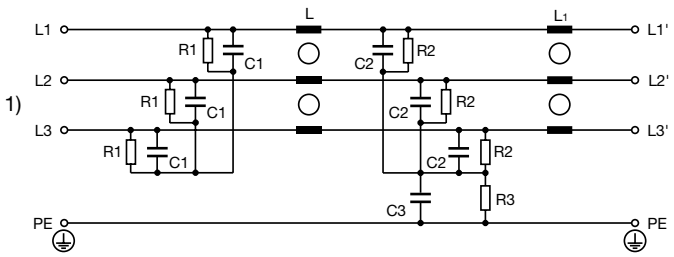

1) Line

Derating Curves

Permissible Working Current as a Function of Ambient Temperature

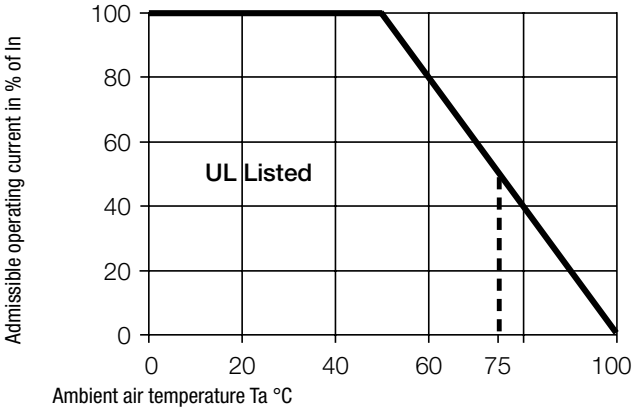

Attenuation Loss

. . . . . 0.1/100Ω differential mode ..... 100/0.1Ω differential mode - - - - differential mode _____ common mode

Industrial Version

7A

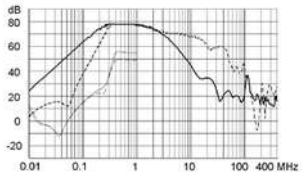

16A

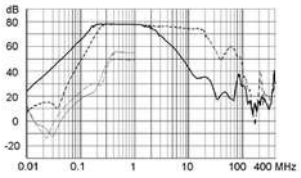

30A

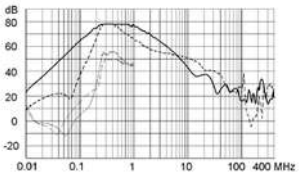

42A

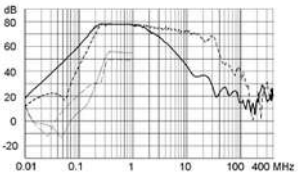

55A

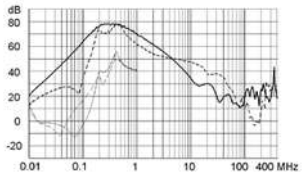

75 A

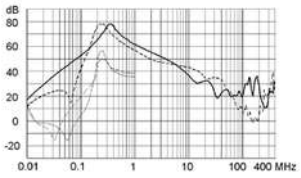

100A

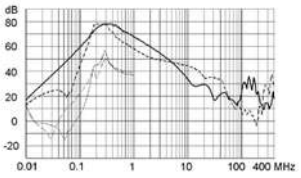

130A

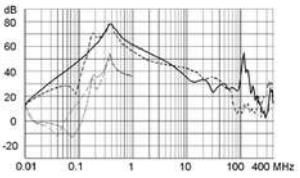

180A

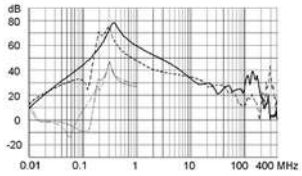

Variants

Rated Current @ Ta 50°C (75°C) [A]	Rated Voltage [VAC]	Tripped Power Dissipation [W]	Leakage Current [mA] 1)	Contact Resistance [mΩ]	Weight [kg]	Screw clamps [mm²] 2)	Housing	Packaging unit	Order Number
7 (4.7)	480	1.4	< 33	9.2	0.8	6	1U	-	FMBC-A91U-0710
16 (12)	480	4.9	< 33	6.3	1.1	6	1C	-	FMBC-A91C-1610
30 (21)	480	6.8	< 33	2.5	1.5	10	1Q	-	FMBC-A91Q-3010
42 (31)	480	13.8	< 33	2.6	1.9	10	1R	-	FMBC-A91R-4210
55 (49)	480	12.7	< 33	1.4	2.5	25	1S	-	FMBC-A91S-5510
75 (52)	480	16.9	< 33	1	3.8	25	1F	-	FMBC-A91F-7510
100 (70)	480	24	< 33	0.8	5	50	1G	-	FMBC-A91G-J010
130 (92)	480	30.5	< 33	0.6	4.8	50	1G	-	FMBC-A91G-J310
180 (135)	480	19.5	< 33	0.2	8	95	1V	-	FMBC-A91V-J810
7 (4.7)	520	1.4	< 33	9.2	0.8	6	1U	-	FMBC-A91U-0712
16 (12)	520	4.9	< 33	6.3	1.1	6	1C	-	FMBC-A91C-1612
30 (21)	520	6.8	< 33	2.5	1.5	10	1Q	-	FMBC-A91Q-3012
42 (31)	520	13.8	< 33	2.6	1.9	10	1R	-	FMBC-A91R-4212
55 (49)	520	12.7	< 33	1.4	2.5	25	1S	-	FMBC-A91S-5512
75 (52)	520	16.9	< 33	1	3.8	25	1F	-	FMBC-A91F-7512
100 (70)	520	24	< 33	0.8	5	50	1G	-	FMBC-A91G-J012
130 (92)	520	30.5	< 33	0.6	4.8	50	1G	-	FMBC-A91G-J312
180 (135)	520	19.5	< 33	0.2	8	95	1V	-	FMBC-A91V-J812

1) Worst case leakage current acc. to IEC60950 - Annex G4 (situation with two interrupted lines). Nominal leakage current acc. to IEC60950 - 5.2.5. can be found in section technical data.

2) Maximum conductor cross section (wire gauge) to be used; a comparative table for AWG and mm² values can be found in the general product information www.schurter.com/emc_info

The specifications, descriptions and illustrations indicated in this document are based on current information. All content is subject to modifications and amendments.