MIDI TORCH

M-85 ZONES 0 1 2 20 21 22

WITHOUT COMPROMISE

PRODUCT INFORMATION

The Midi Torch is a compact high power LED pocket torch delivering excellent illumination, robustness and reliability in the most extreme conditions and is CE marked to the ATEX directive and IECEx certified for safe use in Zones 0,1 and 2 potentially explosive gas and Zones 20, 21 and 22 dust atmospheres.



LIGHT OUTPUT/DURATION/POWER

- Fitted for life LED light sources with 25,000+ hrs life
- Up to 210lm (at source)
- Up to 7 hrs Battery Duration

CERTIFICATION

- ATEX & IECEx Directive explosive gas, vapour, mist and dust certified for zones 0, 1, 2, 20, 21 and 22
- T3/T4 temperature class
- 200°C maximum surface temperature
- IP67 ingress protection
- IIC Gas and IIIB Dust Approval
- Group I M1 Mining Approval

FEATURES

- Anti roll foot allowing it to be placed securly on base or side
- Powered by 4 x AA cells
- Supplied with cells compliant with T4 certification
- Easy to store in pockets
- Lightweight, ergonomic design
- Proven impact resistance
- Single handed switching
- Switch protection shroud
- Supplied with wrist strap* (do not attach and use wrist strap in Zone 0/20 areas or applications)





TECHNICAL INFORMATION

LIGHT OUTPUT DIAGRAM

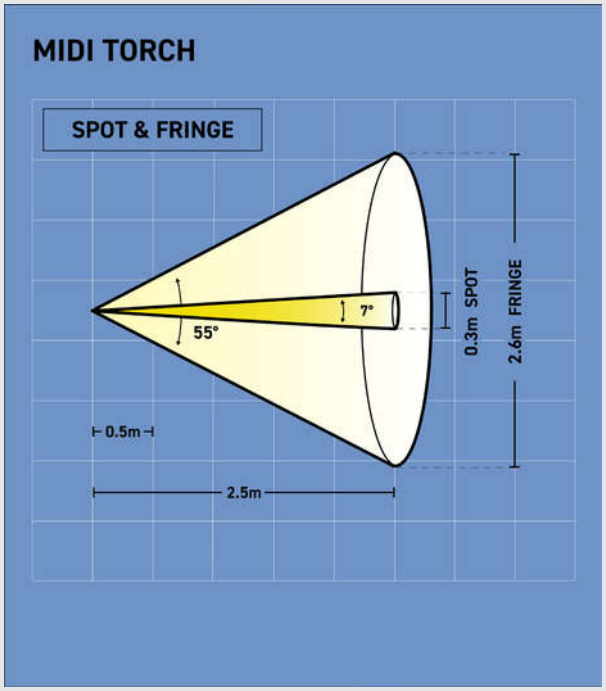

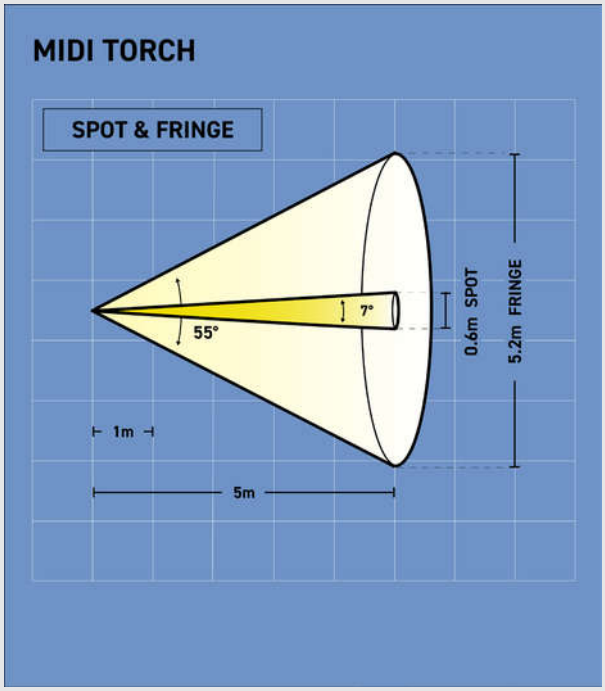

210 lumens LED **Spot Beam** (approx 7°) with a Wide Angle Fringe Beam (approx 55°)
Peak luminous intensity at 1m **6500 lux**, at 2.5m **1233 lux**

PRODUCT DIMENSIONS

M-85 MIDI TORCH

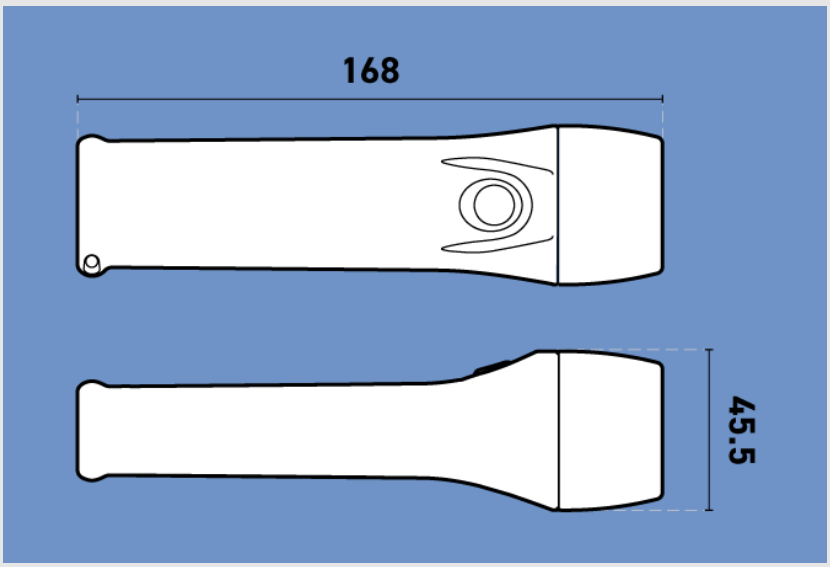

MEASUREMENT MM

MIDI TORCH		
PRODUCT REFERENCE		**M-85**
PRODUCT DESCRIPTION		Primary Cell ATEX Midi Safety Torch with LED
CODE	**ATEX**	II 1G Ex ia op is IIC T3/T4 Ga IP67 II 1D Ex ia op is IIIB T200°C Da
	MINING	I M1 Ex ia I Ma IP67
TYPE OF PROTECTION		'ia' Intrinsic Safety
AREA OF CLASSIFICATION (GAS)		Zones 0, 1 & 2, Gas group IIC
TEMPERATURE CLASS (GAS)		T3 / T4
AREA OF CLASSIFICATION (DUST)		20, 21 and 22, Dust Groups IIIA and IIIB
MAX. SURFACE TEMP. (DUST)		200°C
AMBIENT TEMPERATURE		-40°C to +40°C
CERTIFICATE	**ATEX**	Baseefa11ATEX0236X
	IECEX	IECEx BAS 11.0116X
ENCLOSURE / LENS		Impact Resistant Thermoplastic with a Polycarbonate Impact Resistant lens
BEAM TYPE		Narrow Spot with Wide Angle Fringe Light
LIGHT SOURCE	**TYPE**	High Power LED
	OUTPUT (AT SOURCE)	Up to 210lm
	LIFE	25,000+ hrs (Fitted for life)
POWER SOURCE	**PART NO.**	TP-295 (4 x LR6 Cells)
	TYPE	LR6 Primary Cells, to IEC 60086, Alkaline AA
	VOLTS	4 x 1.5V
LIGHT DURATION		Up to 7 hrs
INGRESS PROTECTION		IP67
WEIGHT (INC. CELLS)		0.190kg

All information has been gathered under laboratory conditions, the user must regard the values given as approximate. Changes may be made to the above specification without notification, details are available on request.

Wolf Safety Lamp Company
Saxon Road Works, Sheffield S8 0YA, UK

T: +44 (0) 114 255 1051
E: info@wolfsafety.com