828 Flashing Beacon



Base/Bracket Mounting



Tube mounting



Accessories

- Tube mounting solution suitable for Ø 25 mm and 1/2" NPT tubes
- Also available in 10-60 V AC/DC version
- Removal of the lens only possible with tools
- Also available with 2 frequencies

TECHNICAL SPECIFICATIONS:

Dimensions (Ø x Height):	98 mm x 137 mm (Base/Bracket mounting) 98 mm x 200 mm (Tube mounting)
Cable entry:	Cable diameter 5-7 mm
Housing:	PC/ABS-Blend
Lens:	PC, transparent

FLASHING BEACON 828

Connection:	Screw terminal with wire protection 0.5-2.5 mm²
Flash frequency:	c. 1 Hz
Life duration:	4 x 10⁶ flashes

12 V: Safety contact is triggered by removal of lens.

FLASHING BEACON 828 WITH 2 FREQUENCIES

Connection:	Screw terminal with wire protection max. 2.5 mm²
Flash frequency:	0.5 Hz or 1.5 Hz can be set externally
Life duration:	4 x 10⁶ flashes

ORDER SPECIFICATIONS:

FLASHING BEACON 828

Base/Bracket mounting

Voltage	12 V DC	24 V DC	10-60 V AC/DC	115 V AC	230 V AC
Current consumpt.	500 mA	300 mA	500-120 mA	65 mA	150 mA
red	**828 100 54**	**828 100 55**	**828 180 70**	**828 100 67**	**828 100 68**
yellow	**828 300 54**	**828 300 55**	**828 380 70**	**828 300 67**	**828 300 68**
clear	-	**828 400 55**	**828 480 70**	-	**828 400 68**

Tube mounting

Voltage	24 V DC	115 V AC	230 V AC
red	**828 140 55**	**828 140 67**	**828 140 68**
yellow	**828 340 55**	**828 340 67**	**828 340 68**
clear	**828 440 55**	-	-

FLASHING BEACON 828 WITH 2 FREQUENCIES

	Boden-/Winkelmontage	Rohrmontage
Voltage	24 V DC	24 V DC
Current consumption	500 mA	500 mA
red	**828 120 55**	**828 160 55**
yellow	**828 320 55**	**828 360 55**

ACCESSORIES:

Accessories see page 156.

TECHNICAL DIAGRAMS:

see page 316

Sizes of Flashing Beacons



828 X00 XX
828 X40 XX
828 X20 XX
828 X60 XX

See note on page 347

Base/Bracket mounting

Tube mounting

200 g

235 g

IP65

+50°C

-20°C

5 Ws

Technical Diagrams

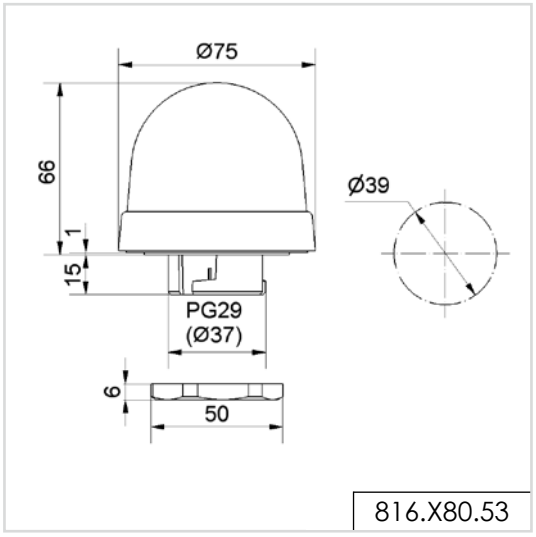

816.X80.53

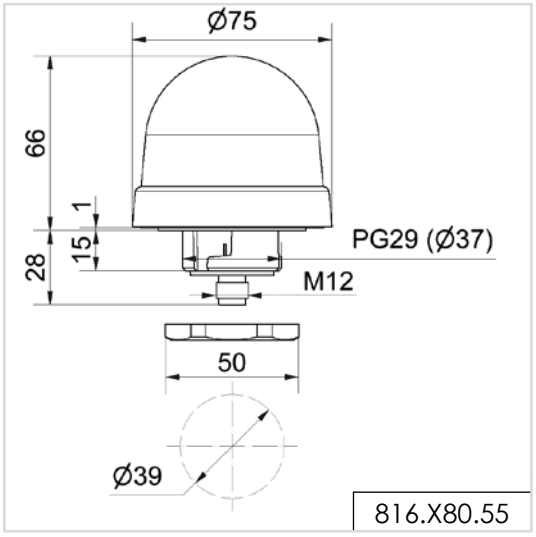

816.X80.55

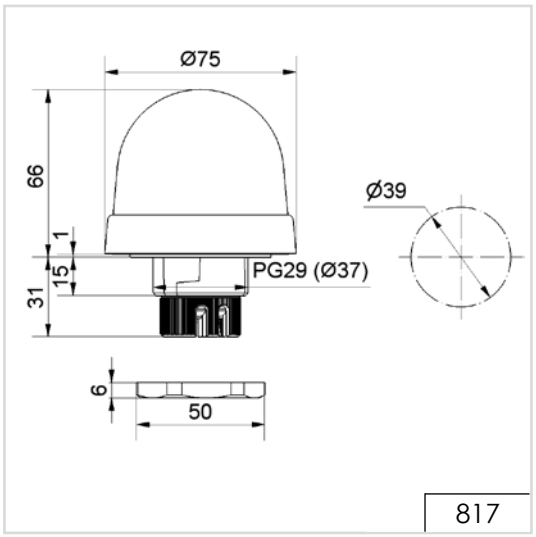

817

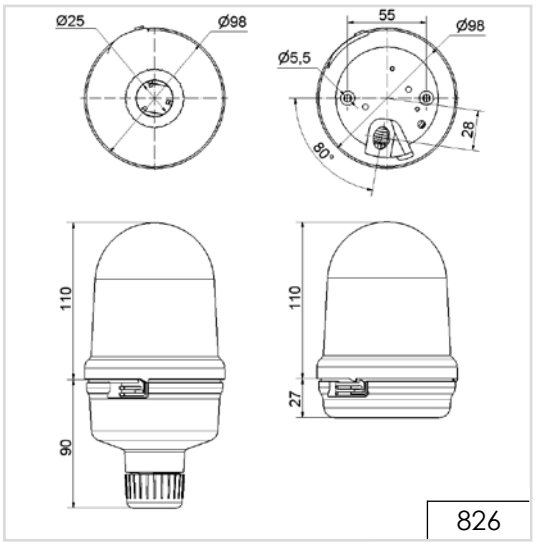

826

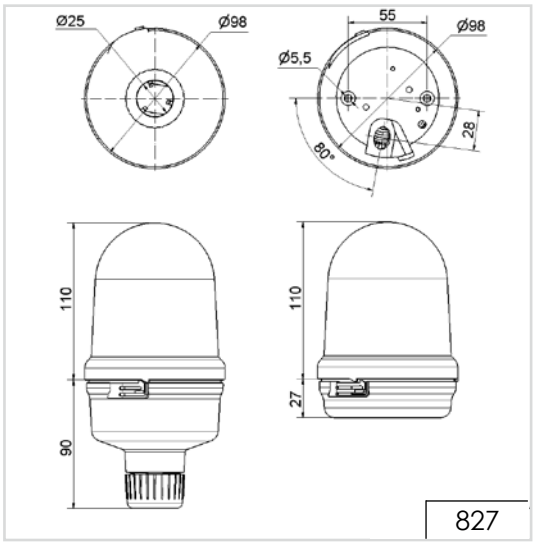

827

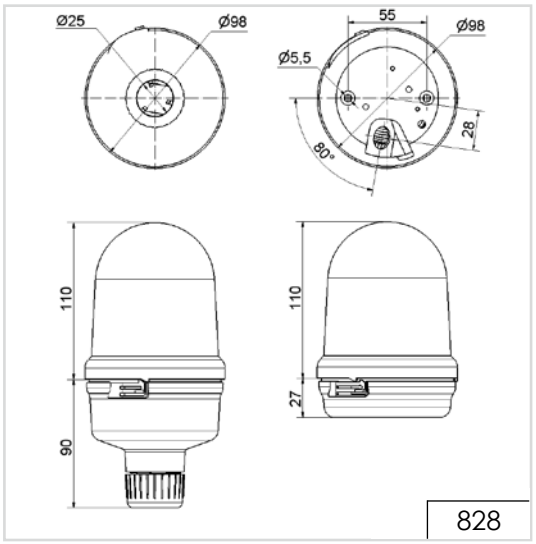

828

WERMA SIGNALTECHNIK

Technical Diagrams

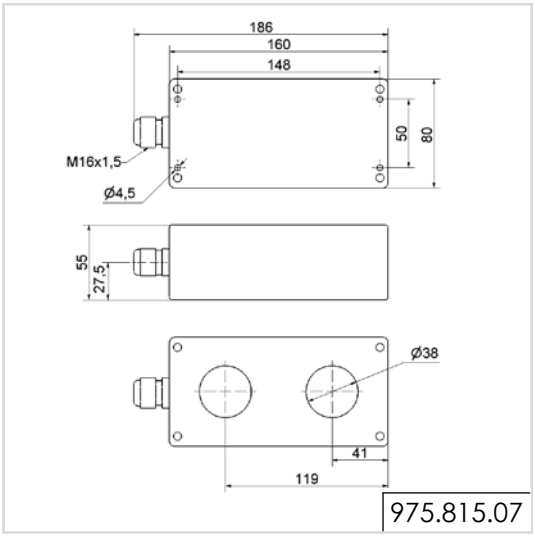

975.815.07

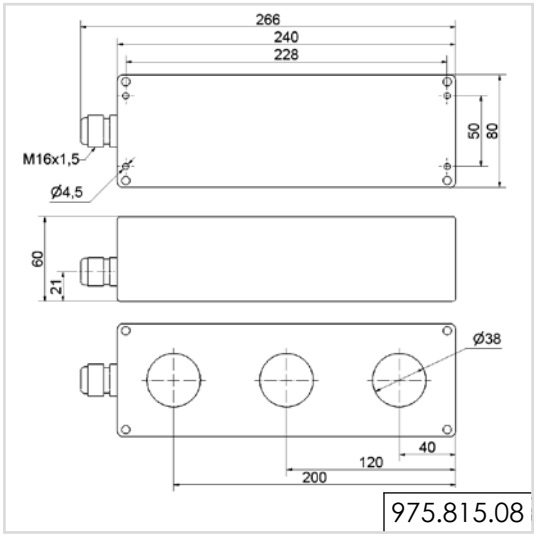

975.815.08

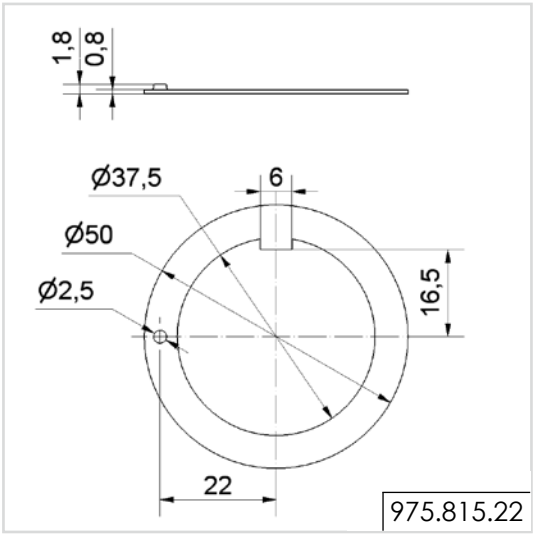

975.815.22

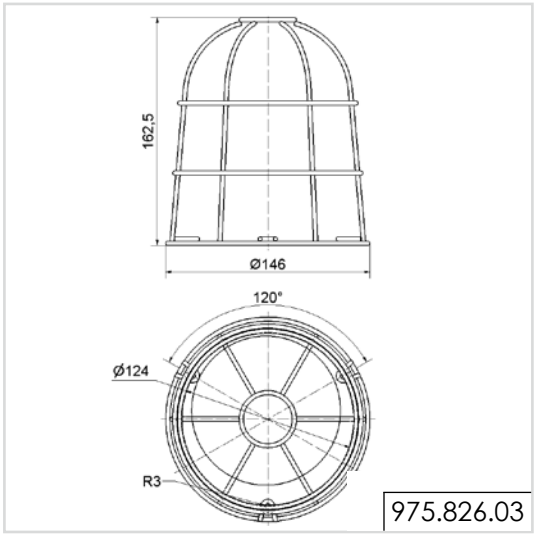

975.826.03

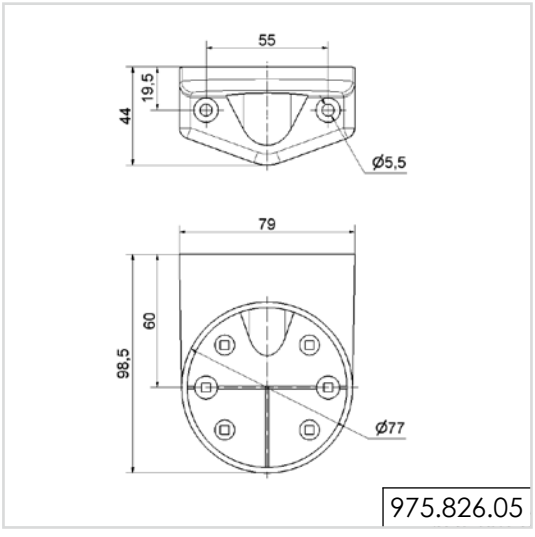

975.826.05

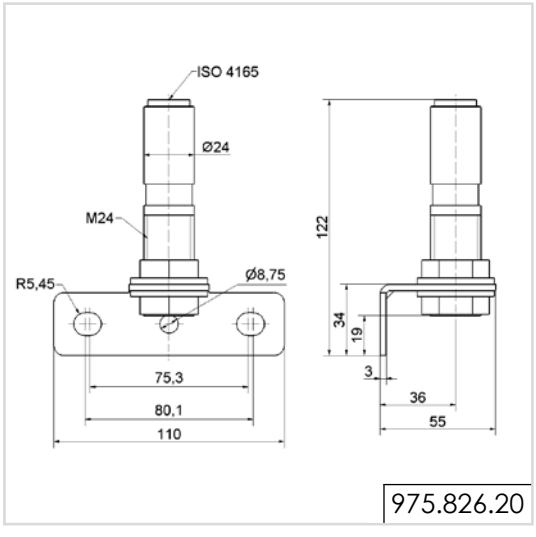

975.826.20