Product datasheet

Specifications



photo-electric sensor - XUX - diffuse - Sn 2.1m - 12..24VDC - M12

XUX5APANM12

XUX5APANM12 has not been replaced. Please contact your customer care centre for more information.

Discontinued

Main

Range of product	Telemecanique Photoelectric sensors XU
Series name	General purpose single mode
Electronic sensor type	Photo-electric sensor
Sensor name	XUX
Sensor design	Compact 92 x 71
Detection system	Diffuse
Material	Plastic
Type of output signal	Discrete
Supply circuit type	DC
Wiring technique	3-wire
Discrete output type	PNP
Discrete output function	1 NO
Electrical connection	1 male connector M12, 4 pins
Product specific application	-
Emission	Infrared diffuse
[Sn] nominal sensing distance	2.1 m diffuse

Complementary

Enclosure material	PBT
Lens material	PMMA
Maximum sensing distance	3 m diffuse
Output type	Solid state
Status LED	1 LED (yellow) for output state 1 LED (green) for supply
[Us] rated supply voltage	12...24 V DC
Switching capacity in mA	<= 100 mA (overload and short-circuit protection)
Switching frequency	<= 250 Hz
Maximum voltage drop	<1.5 V (closed state)

Disclaimer: This documentation is not intended as a substitute for and is not to be used for determining suitability or reliability of these products for specific user applications

Current consumption	<= 35 mA no-load
Maximum delay first up	15 ms
Maximum delay response	2 ms
Maximum delay recovery	2 ms
Setting-up	Sensitivity adjustment
Depth	77 mm
Height	92 mm
Width	31 mm
Net weight	0.2 kg

Environment

Product certifications	UL CSA CE
Ambient air temperature for operation	-25…55 °C
Ambient air temperature for storage	-40…70 °C
Vibration resistance	7 gn, amplitude = +/- 1.5 mm (f = 10…55 Hz) conforming to IEC 60068-2-6
Shock resistance	30 gn (duration = 11 ms) conforming to IEC 60068-2-27
IP degree of protection	IP67 double insulation conforming to IEC 60529 IP65 double insulation conforming to IEC 60529

Packing Units

Unit Type of Package 1	PCE
Number of Units in Package 1	1
Package 1 Weight	185.0 g
Package 1 Height	4.2 cm
Package 1 width	9.7 cm
Package 1 Length	13.3 cm
Unit Type of Package 2	S01
Number of Units in Package 2	11
Package 2 Weight	2.213 kg
Package 2 Height	15 cm
Package 2 width	15 cm
Package 2 Length	40 cm

Offer Sustainability

Sustainable offer status	Green Premium product
REACh Regulation	REACh Declaration
EU RoHS Directive	Pro-active compliance (Product out of EU RoHS legal scope) EU RoHS Declaration
Mercury free	Yes
RoHS exemption information	Yes
Environmental Disclosure	Product Environmental Profile
Circularity Profile	End of Life Information

Contractual warranty

Warranty	18 months

Product datasheet XUX5APANM12

Dimensions Drawings

Dimensions

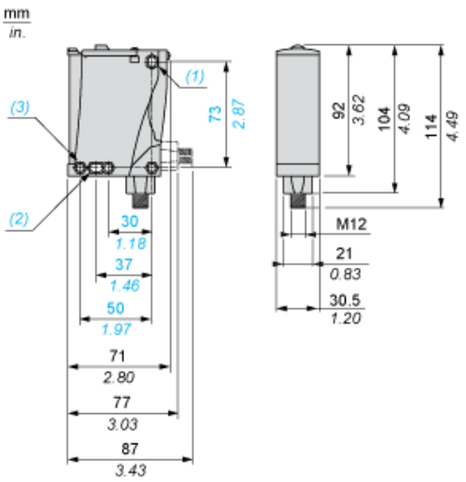

(1) Elongated hole Ø 5.5 x 7
(2) Elongated hole Ø 5.5 x 9
(3) Ø 5.5 hole

Mounting and Clearance

Possible Orientation of Elbowed Connector (Rear View)

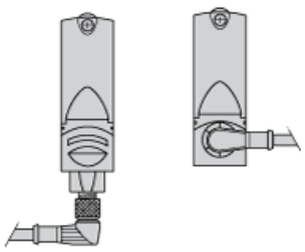

Product datasheet XUX5APANM12

Connections and Schema

Wiring Schemes

M12 Connector

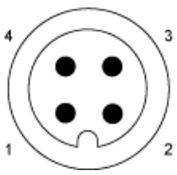

PNP/NPN DC

M12		Terminals		
1		1		+
3		2		-
4		3		Output

Product datasheet XUX5APANM12

Performance Curves

Detection Curves

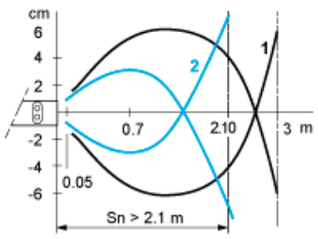

1 : White 90%
2 : Grey 18%

Object 10 x 10 cm