efector300

ifm electronic

Flow sensors

SU9000

SUR54HGBFRKG/W/US
Ultrasonic volumetric flow sensor
Connector
Process connection: G1¼ flat seal

Function programmable
Totalizer function
2 outputs
OUT1 = flow monitoring (binary), flow rate meter (pulse), preset meter (binary)
OUT2 = flow monitoring or temperature monitoring (analogue or binary)
Input for counter reset
Measuring range
0...200 l/min
-10...80 °C
Maximum permissible flow rate
220 l/min (13.2 m³/h)
connection to pipe by means of an adapter

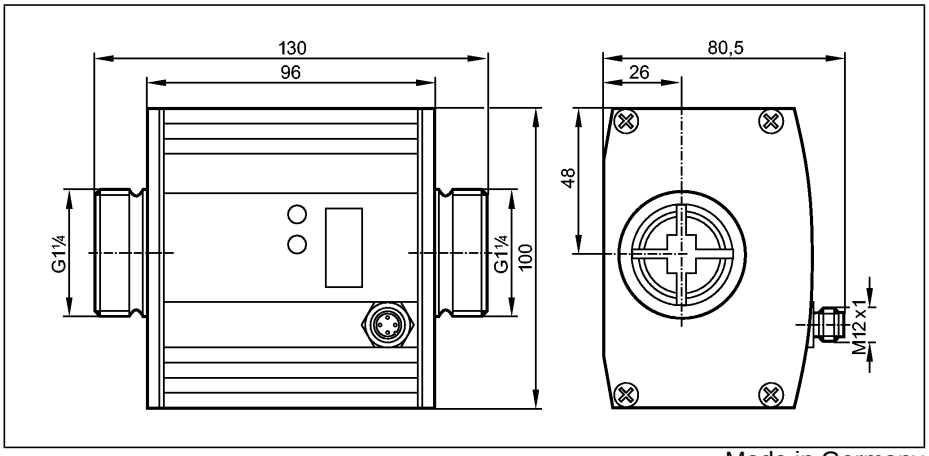

Made in Germany

Application		**liquids: water, glycol solutions, oils (viscosity: ≤ 68 mm²/s at 40°C)**	
Electrical design		**DC PNP/NPN**	
Output		**OUT1: normally open / closed programmable or pulse OUT2: normally open / closed programmable or analogue (4...20 mA / 0...10 V, scaleable)**	
Operating voltage	[V]	19...30 DC [1])	
Current rating	[mA]	2 x 250	
Short-circuit protection		pulsed	
Reverse polarity protection		yes	
Overload protection		yes	
Voltage drop	[V]	< 2	
Current consumption	[mA]	100	
Power-on delay time	[s]	10	
Analogue output		4...20 mA (max. 500 Ω) / 0...10 V (min. 2000 Ω)	
Pulse output		flow rate meter	
Pulse value		0.1 l...100000 m³	
Pulse length [s]		min. 0.189 / max. 2	
Flow monitoring			
Display range		0.0...240.0 l/min	0.00...14.40 m³/h
Measuring range		0.0...200.0 l/min	0.00...12.00 m³/h
Resolution		0.1 l/min	0.01 m³/h
Setting range			
Set point, SP		0.4...200.0 l/min	0.02...12.00 m³/h
Reset point, rP		0.0...199.6 l/min	0.00...11.98 m³/h
Analogue start point, ASP		0.0...160.0 l/min	0.00...9.60 m³/h
Analogue end point, AEP		40.0...200.0 l/min	2.40...12.00 m³/h
in steps of		0.1 l/min	0.01 m³/h
Damping, dAP	[s]	0.0...1.0	
Response time	[s]	< 0.250 (dAP = 0)	
Start-up delay	[s]	0...50	
Accuracy	[% of the final value]	< ± (3% MW + 0.2% MEW) *) / < ± (8% MW + 0.5% MEW) **)	
Repeatability		1 l/min; 60 l/h; 0.06 m³ /h	

SU9000

Pressure loss (dP) / flow rate (Q)		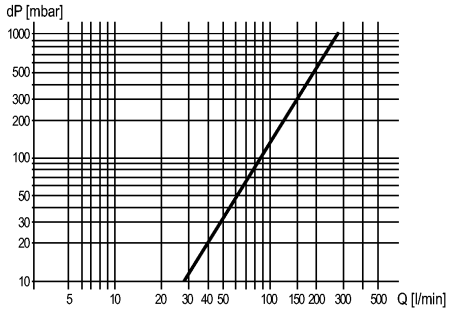
Temperature monitoring		
Measuring range	[°C]	-10...80.0
Resolution	[°C]	0.2
Setting range		
Set point, SP	[°C]	-9.8...80.0
Reset point, rP	[°C]	-10.0...79.8
Analogue start point, ASP	[°C]	-10.0...62.0
Analogue end point, AEP	[°C]	8.0...80.0
in steps of	[°C]	0.2
Response time	[s]	T09 = 30 (Q > 20 l/min) *)
Accuracy	[°C]	± 3 (Q > 20 l/min)
Ambient temperature	[°C]	-10...60
Medium temperature	[°C]	-10...80
Storage temperature	[°C]	-25...80
Protection		IP 67, III
Insulation resistance	[MΩ]	> 100 (500 V DC)
Pressure rating	[bar]	16
Shock resistance		DIN IEC 68-2-27: 20 g (11 ms)
Vibration resistance		DIN IEC 68-2-6: 5 g (10...2000 Hz)
EMC		EN 61000-4-2 ESD: 4 kV CD / 8 kV AD EN 61000-4-3 HF radiated: 10 V/m EN 61000-4-4 Burst: 2 kV EN 61000-4-5 Surge: 0.5 kV EN 61000-4-6 HF conducted: 10 V
MTTF	[Years]	185
Housing materials		housing: AlMgSi0.5 anodised; sealing: Viton; connector housing: brass Optalloy-plated; PA 6.6; cover film: polyamide
Materials (wetted parts)		stainless steel 316L / 1.4404; Viton; PPS; Centellen 200
Display		Display unit 6 x LED green (l/min, m³/h, l, m³, 10³, °C) Switching status 2 x LED yellow Measured values 4-digit alphanumeric display Programming 4-digit alphanumeric display
Connection		M12 connector; gold-plated contacts
Weight	[kg]	1.903
Remarks		[1]) to EN50178, SELV, PELV *) for water **) for glycol solutions (35%) and oils (viscosity: 68 mm²/s at 40°C) sealing: only with supplied Centellen seals MW = measured value MEW = final value of the measuring range

SU9000

Accessories (included)	2 x packing washer (Centellen)
Accessories (optional)	adapter order no. E40205 (for R1 pipe, high-grade stainless steel)

Wiring

OUT1: 3 selection options
- switching output volumetric flow monitoring
- pulse output volumetric flow
- switching output preset counter

OUT2/InD: 5 selection options
- switching output volumetric flow monitoring
- switching output temperature monitoring
- analogue output volumetric flow
- analogue output temperature
- input for an external reset signal



