830A Short ratcheting tap wrenches

- Two-way ratchet.
- Ratchet lock.
- Polished chrome finish.

	⇿ max mm		Length mm	⚖ g
830A.5	5	M6	85	164
830A.10	8	M12	105	316



830A.RN Repair kits

- Comprising chuck and spring.

	For	⚖ g
830A.5RN	830A.5/830A.5L	13
830A.10RN	830A.10/830A.10L	13

831 Adjustable tap wrenches

- Pressure-cast Zamak body. Machined and hardened clamp.
- Grey hammered finish.

	⇿ min - max		Length mm	⚖ g
831.1	2 - 8	M3→M7	180	96
831.2	4 - 11	M5→M12	300	296
831.3	5 - 16	M6→M20	385	703

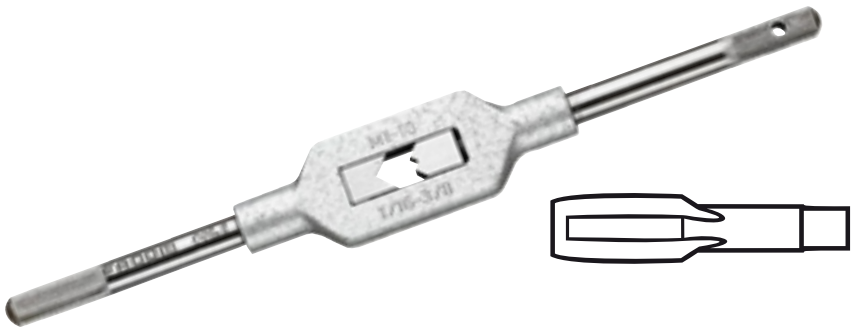

832 Die stocks

- Pressure-cast Zamak body for accurate centring of the die.
- Grey hammered finish.

	For ✪	Length mm	Ø mm	Ø "	⚖ g
832.1'	3x50→9x125	220	25,4	1	116
832.1'1/2	10x150→18x250	325	38,1	1-1/2	408

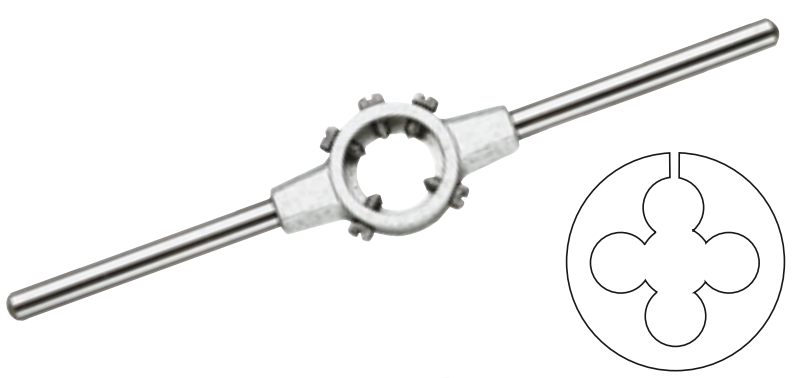

Workshop drill bits

222A.TJ Sets of ground twist drills

▷ ISO 235, DIN 338, NF ISO 235.

- For steel up to 700 MPa, stainless steel, grey cast-iron and aluminium alloy.

	x ⇿	Ø min - max mm	x mm	mm	⚖ kg
222A.TJ19	19	1 - 10	0,5	165 x 110 x 35	0,73
222A.TJ25	25	1 - 13	0,5	190 x 110 x 54	1,39
222A.TJ50	50	1 - 5,9	0,1	135 x 120 x 35	0,76
222A.TJ81	81	2 - 10	0,1	235 x 210 x 145	3,7



Set of ground twist drills

222A.TJ32

- For steel up to 700 MPa, stainless steel, grey cast-iron and aluminium alloy.
- 20 drill bits 222A.T Ø 1 to 10.5 mm in 1/2 mm increments.
- 12 drill bits, tapping and riveting dimensions :

- Ø d1.9-2.1-2.6-2.9-3.2-3.3-3.8-4.2-5.1-6.8-7.9- 10.2 mm.

- Dimensions : 170 x 110 x 50 mm.

⚖ : 1.17 kg.

