Ex command devices
Ex 14 RUV-S 2Ö 5m cable left
Material number: 1181741 (Material number (old): 14559304)

Features/Options

- Ex zone 1 and 21
- Double insulated ⧈
- Mounting hole diameter 22.5 mm
- With pre-wired cable left side
- Actuator: Emergency-stop push-button RUV
- Actuator made of plastic
- According to EN ISO 13850
- Projection from front of panel 41 mm
- With collar to prevent blocking
- Reset by turning clockwise
- With pressure-point to protect against unintentional actuation
- N.B.: Please state required approvals for Russia, China, Brazil and North America with your order!

Dimensions

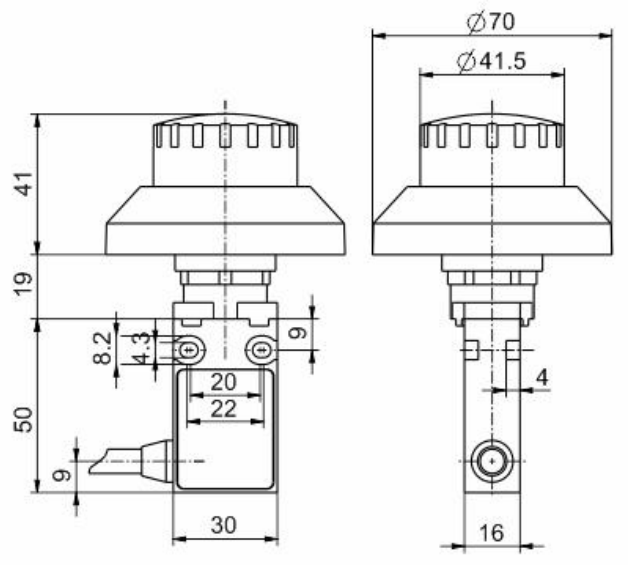

Switching diagram

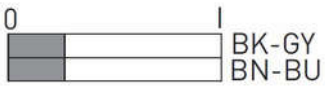

Contact diagram

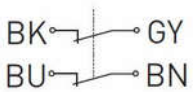

Cut out dimensions

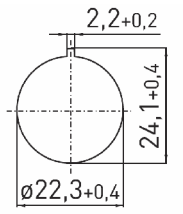

Technical data

Standards	EN 60947-5-1; EN 1088; EN 60079-0; EN 60079-1; EN 60079-31; EN ISO 13849-1
Enclosure	glass-fibre reinforced, shock-proof thermoplastic, self-extinguishing UL 94-V0
Degree of protection	IP 65 to IEC/EN 60529
Contact material	silver
Switching system	slow action, positive break
	NC contacts ⊖
Switching elements	2 NC contacts with double break, galvanically separated contact bridges
Connection	pre-wired cable H05VV-F
Cable cross-section	4 x 0.75 mm²
Cable length	5 m
B_{10d} (10 % Load)	60.000
T_M	max. 20 years
U_{imp}	4 kV
U_i	250 V
I_{the}	T6: 6 A, T5: 3 A
I_e/U_e	6 A/250 VAC; 0.25 A/230 VDC
Utilisation category	AC-15; DC-13
Max. fuse rating	6 A gG/gN fuse
Ambient temperature	T6: –20 °C ... +65 °C, T5: –20 °C ... +95 °C
Mechanical life	› 30.000 operations
Frequency of operation	1800/h
Note	Switch must be protected from mechanical damage!
Ex marking	II 2G Ex d IIC T6/T5 Gb, ⟨Ex⟩ II 2D Ex tb IIIC T80 °C/T95 °C Db IP65 IECEx Ex d IIC T6/T5 Gb, Ex tb IIIC T80 °C/T95 °C Db IP65
Approvals	PTB 03 ATEX 1070 X IECEx PTB 06.0098X

Errors and omissions excepted.

steute Schaltgeräte GmbH & Co. KG | Postfach 3343 32567 Löhne | Brückenstraße 91 32584 Löhne | Telefon +49 (0)5731 / 745-0 Telefax +49 (0)5731 / 745-200 | info@steute.com www.steute.com | Amtsgericht Bad Oeynhausen HRA 2125