MURR ELEKTRONIK
stay connected

MIRO 6.2 pluggable compl. Module Optocoupler

IN: 24 VDC - OUT: 24 VDC / 6 A

Transistor 6 A
24 V DC
Spring clamp terminals
Complete module

[Link to Product]

Illustration



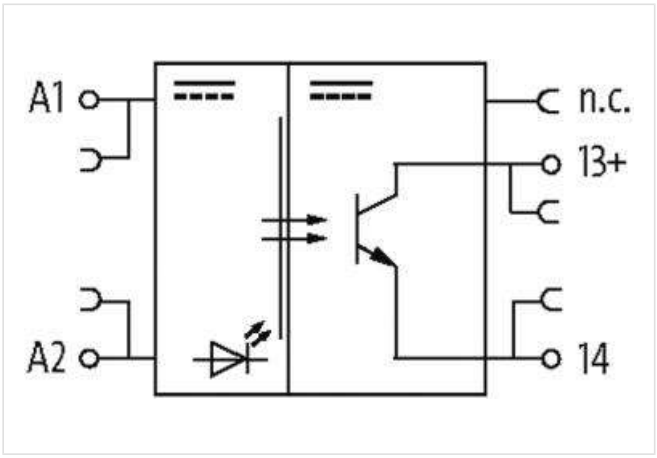

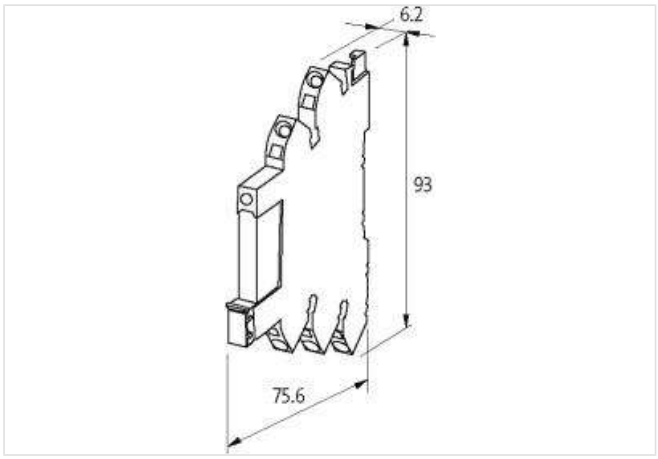

Product may differ from Image

Commercial data

ECLASS-6.0	27371604
ECLASS-6.1	27371604
ECLASS-7.0	27371604
ECLASS-8.0	27371604
ECLASS-9.0	27371604
ECLASS-10.1	27371604

The information in this Product-PDF has been compiled with the utmost care.
Liability for the correctness completeness and topicality of the information is restricted to gross negligence. Version: 2024-01-31

MURR ELEKTRONIK
stay connected

ECLASS-11.1	27371604
ECLASS-12.0	27371604
ETIM-5.0	EC001504
customs tariff number	85365005
GTIN	4048879532747
Packaging unit	1
Electrical data | Input	
Input voltage DC	24 V
Input voltage DC min.	18 V
Input voltage DC max.	30 V
Input current	9 mA
Electrical data | Output	
Switch off delay max.	31 µs
Forward voltage max.	240 mV
Switching frequency inductive max.	50 Hz
Switching frequency ohmic max.	500 Hz
Voltage switching DC min.	3 V
Switching voltage DC max.	30 V
Current switching min.	10 mA
Switching current max.	6 A
Diagnostics	
Status indication LED	yellow
Device protection | Electrical	
Degree of protection (EN IEC 60529)	IP20
Rated insulation voltage	50 V
Rated surge voltage	2,5 kV
Mechanical data | Mounting data	
Mounting method	inserted
Height	93 mm
Width	6,2 mm
Depth	75,6 mm
Environmental characteristics | Climatic	
Operating temperature min.	-25 °C
Operating temperature max.	50 °C

The information in this Product-PDF has been compiled with the utmost care.
Liability for the correctness completeness and topicality of the information is restricted to gross negligence. Version: 2024-01-31