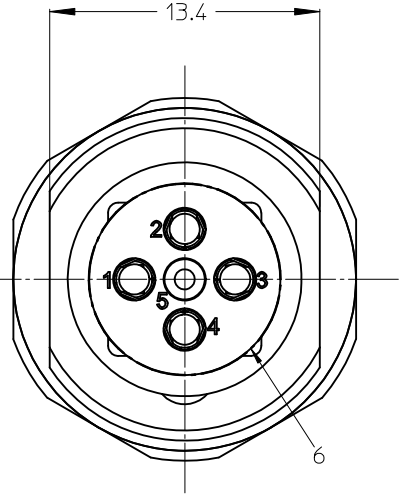

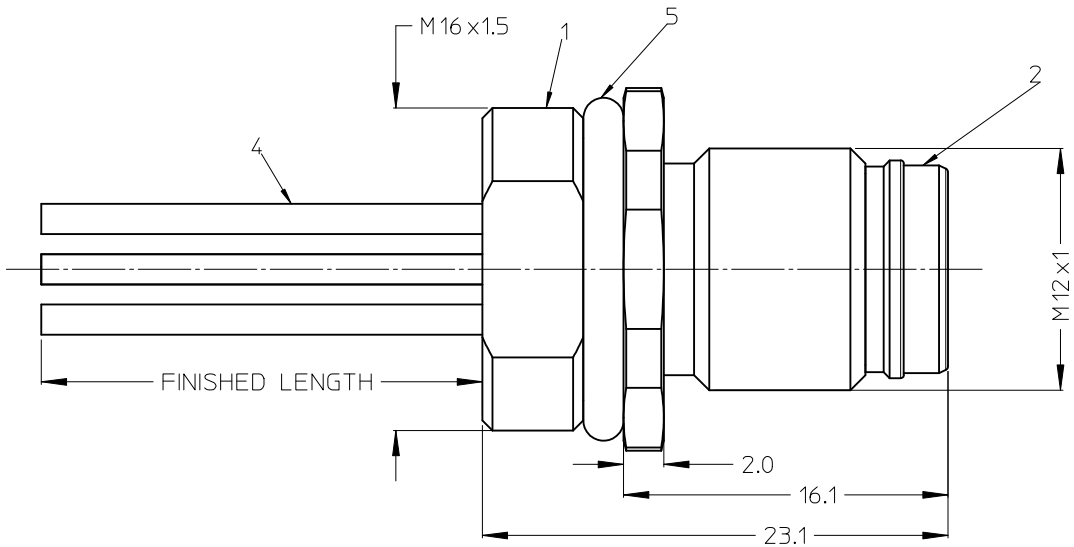

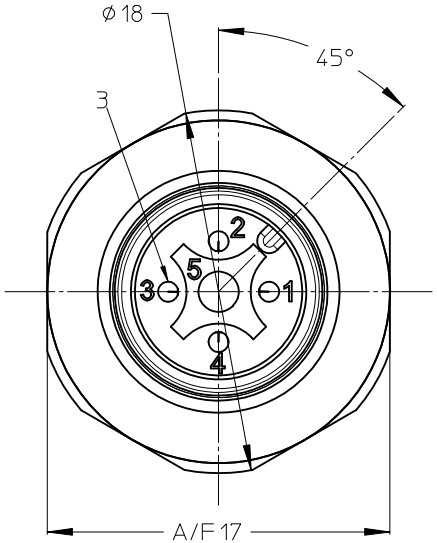

ITEM	COMPONENT	MATRIAL	FINISH
1	REC SHELL	BRASS	NICKEL PLATED
2	INSERT	PA	BLACK
3	CONTACT	BRASS / GOLD	CuZn Ni/ Au
4	WIRES	COPPER/ PVC	NONE
5	O-RING	NBR	BLACK
6	POTTING MATERIAL	EPOXY	NONE

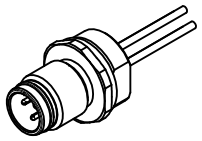

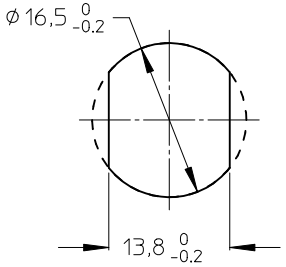

Contact configuration	wire colour	wire mm²	Port
M12 connector 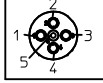	brown	0.34	1
	white	0.34	2
	blue	0.34	3
	black	0.34	4

POL	MATERIAL NO.	ENGINEERING NO.	FINISHED LENGTH
4	1200845108	WR4U26E03C3003	300±10

VOLTAGE RATING	250 VAC/VDC
AMPERAGE RATING	4A
PROTECTION	IP 67/68/69
OPERATING TEMPERATURE	-25°C / +90 °C
UL CERTIFICATION	FILE NO. E152210
CAS CERTIFICATION	FILE NO. LR6837

ENTER DESCRIPTION
EC NO: WEU2010-0309 2010/01/29
DRWN:APOHL_WEU 2010/02/01
CH'KD: 2010/02/02
APPR:FPACHER
DESCRIPTION
1
REV

QUALITY SYMBOLS
▼=0
Ⓒ=0

GENERAL TOLERANCES (UNLESS SPECIFIED)

	mm	INCH
4 PLACES	± ---	± ---
3 PLACES	± ---	± ---
2 PLACES	± 0.05	± ---
1 PLACE	± 0.1	± ---
ANGULAR ±---°		

DRAFT WHERE APPLICABLE MUST REMAIN WITHIN DIMENSIONS

DIMENSION STYLE: MM ONLY
SCALE: 4:1
DESIGN UNITS: METRIC
THIRD ANGLE PROJECTION

DRAWN BY: APOHL_WEU DATE: 2010/01/29
CHECKED BY: DATE:
APPROVED BY: FPACHER DATE: 2010/02/01
MATERIAL NO.: SEE TABLE

TITLE: RECEPTACLE MALE M12-4P ULTRA LOCK,FRONT,M16X1.5

MOLEX INCORPORATED

DOCUMENT NO.: SD-120084-025
SHEET NO.: 1 OF 1
SIZE: A3

THIS DRAWING CONTAINS INFORMATION THAT IS PROPRIETARY TO MOLEX INCORPORATED AND SHOULD NOT BE USED WITHOUT WRITTEN PERMISSION