OBF506

Fibre-optic amplifier

OBF-FAKG/T/AS

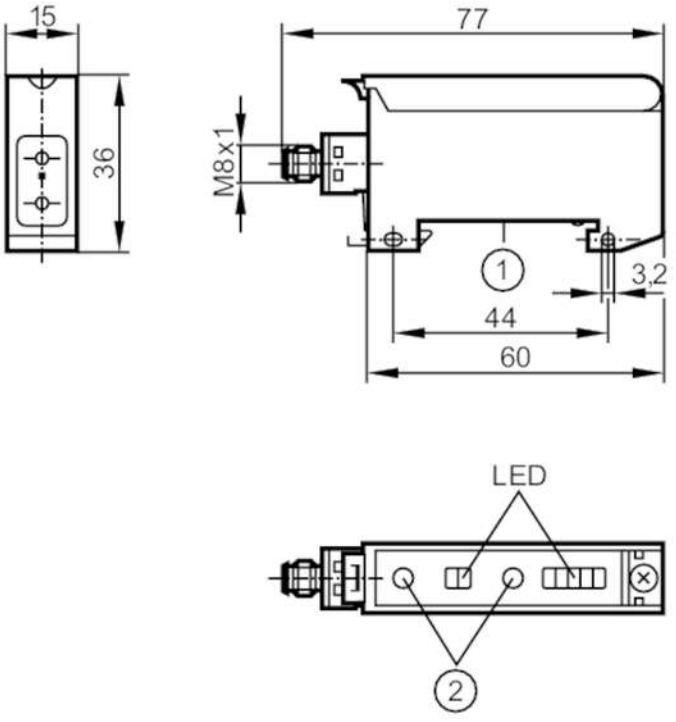

1 mounting on DIN rail
2 setting pushbuttons

Product characteristics		
Type of light		infrared light
Housing		rectangular
Application		
Design		Fibre-optic amplifiers for glass fibre optics, for fibre optics with metal sheath, FE/FT-50
Electrical data		
Operating voltage	[V]	10...30 DC
Current consumption	[mA]	< 50
Protection class		III
Reverse polarity protection		yes
Type of light		infrared light
Wave length	[nm]	880
Outputs		
Electrical design		PNP/NPN; (automatic load detection PNP/NPN)
Output function		light-on/dark-on mode; (programmable)
Max. voltage drop switching output DC	[V]	2.5
Permanent current rating of switching output DC	[mA]	100
Switching frequency DC	[Hz]	500
Short-circuit protection		yes

OBF506

Fibre-optic amplifier

OBF-FAKG/T/AS

Type of short-circuit protection			pulsed
Overload protection			yes
Time function	[s]		0.001...0.09
Detection zone			
Range	[m]		0...0.4; (Through-beam sensor)
Range	[mm]		0...40; (Diffuse reflection sensor)
Factory setting			dark-on mode
			Range: 0...400 mm
			Range: 0...40 mm
Range adjustable			yes
Operating conditions			
Ambient temperature	[°C]		-25...60
Protection			IP 65
Tests / approvals			
EMC		EN 60947-5-2	
MTTF	[years]		860
Mechanical data			
Weight	[g]		47.8
Housing			rectangular
Type of mounting			mounting on DIN rail; (TH35 (EN 60715))
Dimensions	[mm]		36 x 15 x 60
Materials			PPE modified
Lens alignment			side lens
Displays / operating elements			
Display		switching status	1 x LED, yellow
		operation	1 x LED, green
		unsafe zone	1 x LED, red
		excess gain	4 x LED, green
Remarks			
Remarks			light-on mode corresponds to the NC output function for through-beam fibre optics
			corresponds to the NO output function for diffuse-reflection fibre optics
			dark-on mode corresponds to the NO output function for through-beam fibre optics
			corresponds to the NC output function for diffuse-reflection fibre optics
Pack quantity			1 pcs.

OBF506

Fibre-optic amplifier

OBF-FAKG/T/AS

Electrical connection

Connector: 1 x M8; coding: A



