Technical Diagrams

826/827/828 Special parts

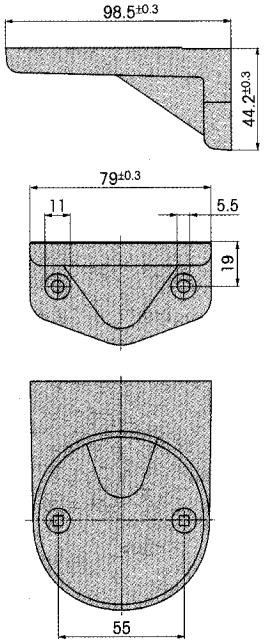

975 826 05 Bracket

826/827/828 Special parts

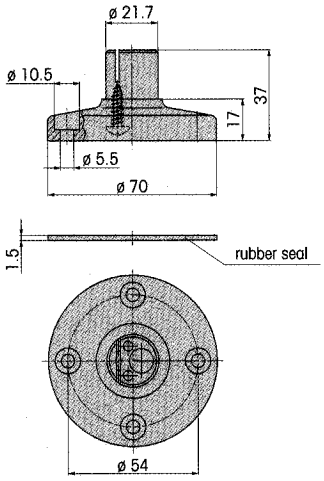

975 840 90 Base

830/834/835 Flashing Beacon

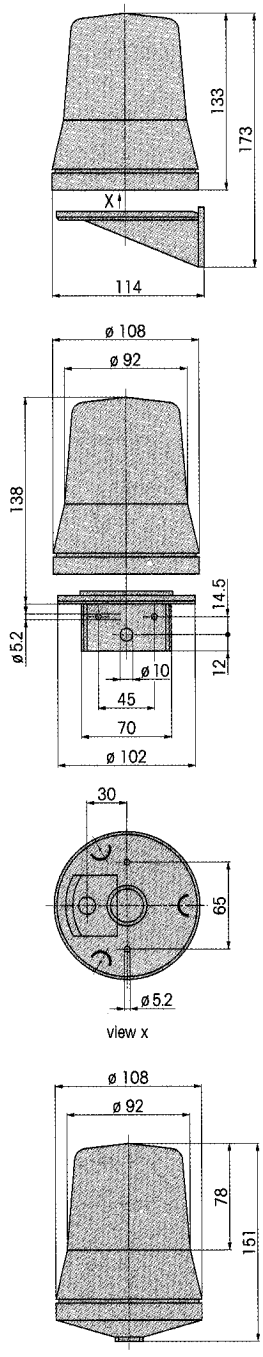

837 Double Flashing Beacon

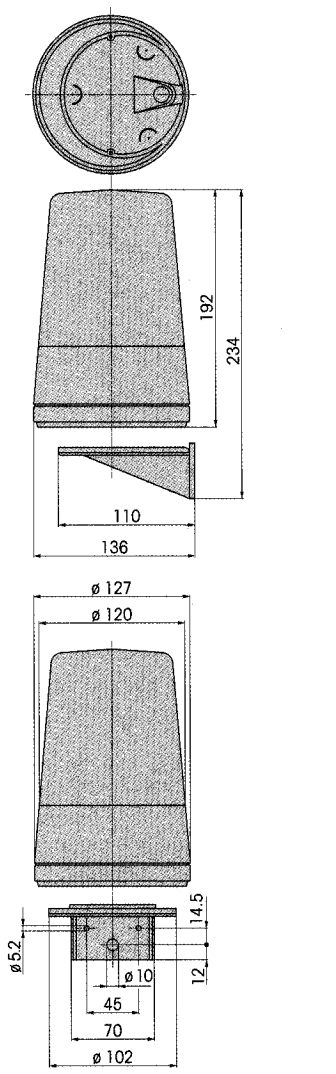

839 Double Flashing Beacon

