LCR400

PRECISION LCR BRIDGE

Service Manual

Book Part Number 48581-1320 Issue 1

Table of Contents

Specifications	2
General	4
Safety	5
Installation	6
Circuit Description	7
Calibration & Diagnostics	12
Parts List	15
Component Layouts	21
Circuit Diagrams	24

Specifications

Specifications apply for 18ºC – 28ºC ambient after 30 minute warm-up.

Functions

Parameters Measured: R, L, C, D & Q.

Measurement Modes: Series or parallel equivalent circuit.

Measurement Functions: Fully autoranging including selection between L, C and R. The Zero C function nulls out up to 100pF of stray capacitance in the test fixture.

Measurement Frequency: User selectable to be 100Hz, 1kHz or 10kHz; frequency accuracy ± 0.01%. 120Hz instead of 100Hz by link option for 60Hz operation, see Installation section.

Measurement Ranges and Resolution:

Parameter	Range
R	0.1mΩ – 990MΩ
L	0.001µH – 9900H
C	0.001pF – 99000µF
D	0.001 – 999
Q	0.001 – 999

Measurement Accuracy:

		100/120Hz	1kHz	10kHz
R (Q<0.1)	0.1% ± 1 digit	2Ω – 1MΩ	2Ω – 500kΩ	2Ω – 50kΩ
	0.5% ± 1 digit	0.4Ω – 5MΩ	0.4Ω – 2MΩ	0.4Ω – 200kΩ
	2% ± 1 digit	0.1Ω – 20MΩ	0.1Ω – 10MΩ	0.1Ω – 500kΩ
L (Q>10)	0.1% ± 1 digit	4mH – 500H	400µH – 50H	40µH – 5H
	0.5% ± 1 digit	800µH – 2500H	80µH – 250H	8µH – 25H
	2% ± 1 digit	200µH – 9900H	20µH – 1000H	2µH – 100H
C (D<0.1)	0.1% ± 1 digit	10nF – 1000µF	1nF – 100µF	100pF – 10µF
	0.5% ± 1 digit	2nF – 5000µF	200pF – 500µF	20pF – 50µF
	2% ± 1 digit	500pF – 20000µF	50pF – 2000µF	5pF – 200µF
Q & D	0.25% ± 1 digit	0.25 – 4.0 for C = 40nF – 100µF or L = 10mH – 50H	0.25 – 4.0 for C = 10nF – 10µF or L = 1mH – 2.5H	0.25 – 4.0 for C = 1nF – 1µF or L = 100µH – 250mH

Capacitance accuracies apply after null.

Measurement Update Rate: 2.5 readings per second.

Limits Comparator (Sort Mode)

Type: Comparison with multiple limits set up from the keyboard or PC via RS232 interface.

Binning: Up to 8 Pass bins for the major parameter, plus minor parameter Fail and general Fail bins.

Display

Display Type:	Dual 5-digit 0.56” LEDs with range and function indication. Maximum display count 50,000.
Display Functions:	Simultaneous display of R + Q, L + Q, C + D, or C + R in normal measurement modes. Prompts to change frequency or mode to improve accuracy. Simultaneous display of Pass/Fail status with Bin No. in Sort mode.

Inputs

Component Connection:	4-terminal connection for both radial and axial devices.
Maximum Voltage on Component:	300mVrms ± 10 mV.
Bias Voltage:	Switchable 2V polarising voltage for measuring electrolytic capacitors.
Input Protection:	The instrument has been designed to withstand direct connection of capacitors charged up to 50V DC with up to 1 Joule (½ CV^2) of stored energy.

Interfaces

RS232:	Serial link to PC permitting range/function control, limits setting and results data-logging on the PC.

General

Keyboard:	Full numeric keyboard for entry of limits data.
Non-Volatile Memory:	Up to 9 complete set ups stored in non-volatile memory.
Power:	220V-240V AC or 110V-120V AC ±10%, 50/60Hz, adjustable internally; 25VA max. Installation Category II.
Operating Range:	+5ºC to 40ºC, 20-80% RH.
Storage Range:	–40ºC to 70ºC.
Environmental:	Indoor use at altitudes up to 2000m, Pollution Degree 2.
Safety:	Complies with EN61010-1.
EMC:	Complies with EN61326.
Size:	365 x 240 x 95 mm, including feet.
Weight:	2.9 kg.
Options:	Remote 4–terminal measurement interface. 4–terminal surface mount tweezers. Kelvin Clip set. PC logging software.

Service Handling Precautions

Service work or calibration should only be carried out by skilled engineers. Please note the following points before commencing work.

Most of the integrated circuits are CMOS devices and care should be taken when handling to avoid damage by static discharge. Also most devices are surface mounted miniature components with very fine leads on small pitches. These components must be removed and replaced with great care to avoid damage to the PCB. It is essential that only the proper tools and soldering equipment as recommended for surface mount components are used.

The decoupling capacitors associated with the integrated circuits are surface mounted on the solder side of the PCB.

Dismantling the Instrument

WARNING!

Disconnect the instrument from all voltage sources before it is opened for adjustment or repair. If any adjustment or repair of the opened instrument is inevitable it shall be carried out only by a skilled person who is aware of the hazards involved.

1. Remove the six screws retaining the top cover (3 on the back face, 3 on the front edge).
2. Raise the back of the top cover a little and slide the cover forward until the cut-out clears the Kelvin connectors. Lift the back of the cover further and disconnect the 2 flat cables from PJ5 and PJ8 on the main pcb, having first noted their positions and orientation. The top cover, with display and keyboard attached, can then be lifted completely clear.
3. To remove the display/keyboard pcb from the top cover first remove the 7 screws which secure the display/keyboard moulding to the cover, then remove the screws which secure the pcb to the moulding. Lift the pcb clear, leaving the key caps in the keyboard moulding. When reassembling, take care to ensure that all the key caps are properly seated in the keyboard moulding and that all the LEDs are aligned with their respective apertures.
4. To remove the main pcb, first release the RS232 connector from the rear panel and unplug the 3-way connection from the power supply pcb. Then remove the 7 screws which secure the main pcb support pillars to the chassis, (i.e. the screws accessible **underneath** the chassis) and lift the pcb clear with its mounting pillars attached.
5. The Kelvin connectors can be taken off as an assembly by removing the 2 screws which secure the assembly to the main board. When reassembling the Kelvin connectors to the pcb take care to ensure that the centre-line of each connector is exactly in line with the other. Later instruments have 2 holes in the chassis which give access to the Kelvin connector mounting screws with the main pcb mounted in the chassis; this permits the alignment of the connectors to be adjusted with the top cover on.
6. The power supply pcb can be removed by undoing the 3 screws from the underside that secure the pcb to the chassis.

Kelvin Connector Contact Cleaning

The contacts of the connectors are made of high quality stainless steel but they can pick up contamination from the environment or from component leads inserted into the connector. Occasionally clean the connectors by inserting a piece of clean stiff card between them and lightly pushing back and forth. In extreme cases the card may be moistened with a little suitable cleaning solution.

Safety

This instrument is Safety Class I according to IEC classification and has been designed to meet the requirements of EN61010−1 (Safety Requirements for Electrical Equipment for Measurement, Control and Laboratory Use). It is an Installation Category II instrument intended for operation from a normal single phase supply.

This instrument has been tested in accordance with EN61010−1 and has been supplied in a safe condition. This instruction manual contains some information and warnings which have to be followed by the user to ensure safe operation and to retain the instrument in a safe condition.

This instrument has been designed for indoor use in a Pollution Degree 2 environment in the temperature range 5°C to 40°C, 20% −80% RH (non−condensing). It may occasionally be subjected to temperatures between +5° and −10°C without degradation of its safety. Do not operate while condensation is present.

Use of this instrument in a manner not specified by these instructions may impair the safety protection provided. Do not operate the instrument outside its rated supply voltages or environmental range.

WARNING! THIS INSTRUMENT MUST BE EARTHED

Any interruption of the mains earth conductor inside or outside the instrument will make the instrument dangerous. Intentional interruption is prohibited. The protective action must not be negated by the use of an extension cord without a protective conductor.

When the instrument is connected to its supply, terminals may be live and opening the covers or removal of parts (except those to which access can be gained by hand) is likely to expose live parts. The apparatus shall be disconnected from all voltage sources before it is opened for any adjustment, replacement, maintenance or repair.

Any adjustment, maintenance and repair of the opened instrument under voltage shall be avoided as far as possible and, if inevitable, shall be carried out only by a skilled person who is aware of the hazard involved.

If the instrument is clearly defective, has been subject to mechanical damage, excessive moisture or chemical corrosion the safety protection may be impaired and the apparatus should be withdrawn from use and returned for checking and repair.

Make sure that only fuses with the required rated current and of the specified type are used for replacement. The use of makeshift fuses and the short−circuiting of fuse holders is prohibited.

Do not wet the instrument when cleaning it.

The following symbols are used on the instrument and in this manual:−



Caution −refer to the accompanying documentation, incorrect operation may damage the instrument.



alternating current.

Mains Operating Voltage

The operating voltage of the instrument is shown on the rear panel. Should it be necessary to change the operating voltage from 230V to 115V or vice-versa, proceed as follows:

1. Disconnect the instrument from all voltage sources.
2. Remove the 6 screws which hold the case upper to the chassis and lift off, noting the flat cable connector positions.
3. Remove the 3 screws securing the power supply pcb to the chassis and lift the pcb free.
4. Change the appropriate zero-ohm links beside the transformer on the pcb:

   Link LK4 only for 230V operation

   Link LK3 and LK5 only for 115V operation

   Note that, if the change of operating voltage is accompanied by a change of supply frequency, optimum common mode rejection of the mains will be achieved by setting the internal 100/120Hz selection to 100Hz for 50Hz supply and 120Hz for a 60Hz supply. This is set by the status of link LK2 which is situated immediately below the oscillator module on the main circuit board. With no shorting link fitted to the pins the frequency is set to 100Hz; if a shorting link is fitted it is set to 120Hz. The factory setting for 230V operation is 100Hz and for 115V operation is 120Hz. If LK2 is changed from the factory setting the unit will need to be recalibrated at the new frequency setting (calibration settings for 100Hz and 120Hz cannot be held simultaneously), see Calibration section.
5. Refit the pcb to the chassis, ensuring all connections (especially safety earth) are remade as before, and refit the case upper.
6. To comply with safety standard requirements the operating voltage marked on the rear panel must be changed to clearly show the new voltage setting.
7. Change the fuse to suit the new operating voltage, see below.

Fuse

The correct time-lag fuse must be fitted for the selected operating voltage.

For 230V operation use 125mA (T) 250V HBC.

For 115V operation use 250mA (T) 250V HBC.

Make sure that only fuses with the required rated current and of the specified type are used for replacement. The use of makeshift fuses and the short-circuiting of fuse holders are prohibited.

Circuit Description

Block Diagram

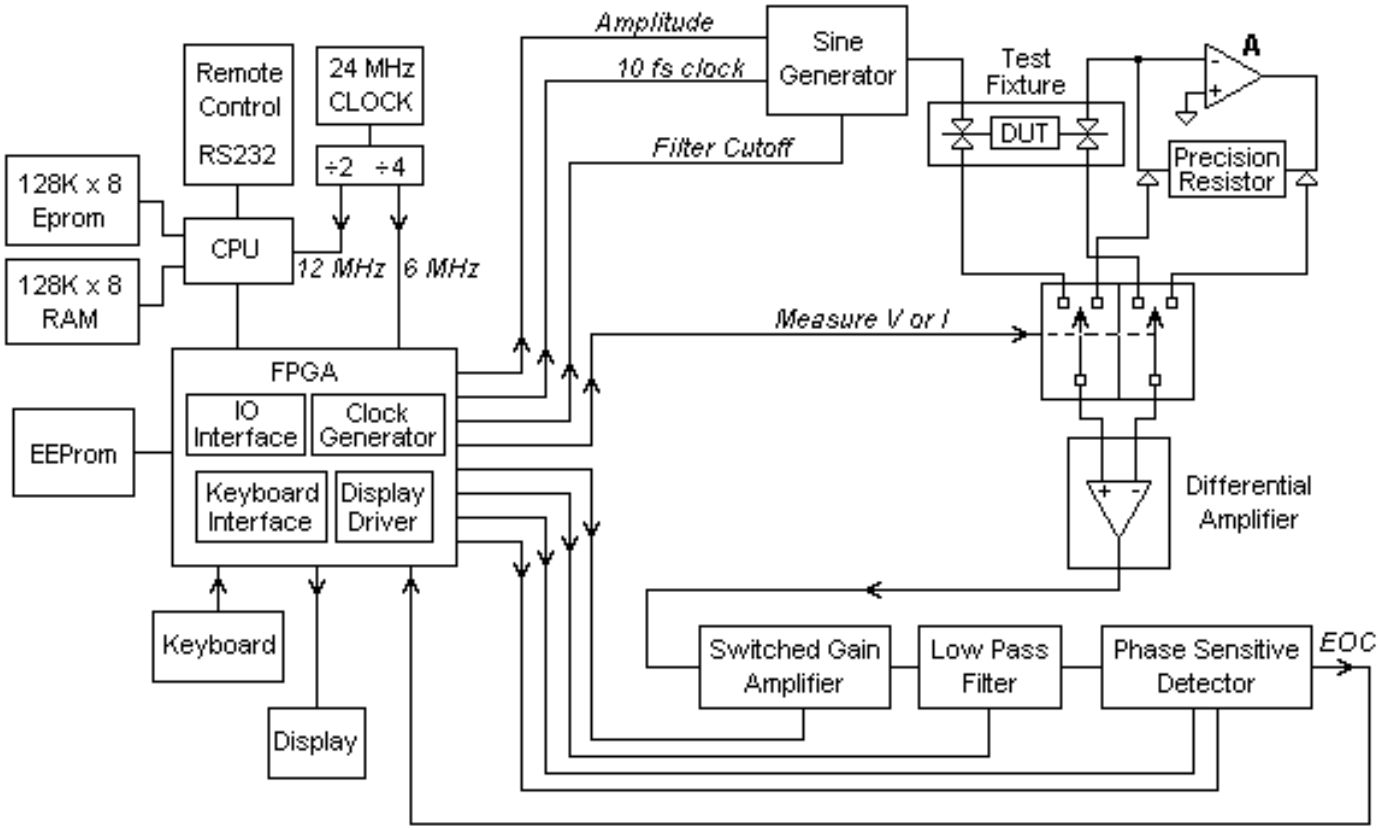

Simplified Block Diagram

Principles of Operation

Refer to the Block Diagram. The technique for measuring the impedance of the device under test (DUT) connected to the test fixture is to apply to it a low distortion sinewave, then to measure this voltage and the resulting current through the DUT and from these two values calculate the impedance. By using a phase sensitive detector to make the measurements the relative phase of the voltage and current can be used to determine the nature of the DUT impedance in terms of resistance, capacitance and inductance.

The sinewave stimulus and the measurement system are under the control of the CPU via a Field Programmable Gate Array (FPGA) that provides control timing and I/O control lines.

The measurement principle relies on the accuracy of frequency of the sinewave stimulus and of the value of the precision resistor to convert the current through the DUT into an equivalent measurable voltage. The sinewave is derived through a series of dividers from the 24 MHz crystal system clock. The precision resistor is high accuracy, low reactance, high stability.

Measurement of the Voltage and Current for the Device Under Test

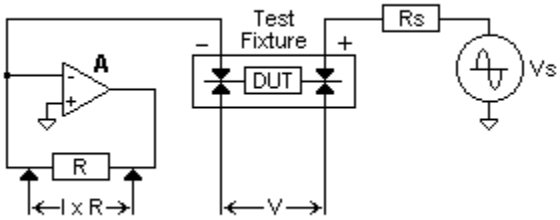

The diagram shows the basic circuit arrangement that enables the voltage across the DUT and the current through it to be measured. Vs is a sinewave voltage that supplies the stimulus to the DUT via the current limiting resistor Rs. The test fixture is drawn to represent the actual connection of the contacts on the LCR400. The test fixture's four terminals provide separate paths for the current through the DUT and the measurement circuit that senses the voltage across it. Amplifier A converts the current through the DUT into a measurable voltage, I x R.

In the LCR400, amplifier A is implemented by IC53 and IC51. IC51 provides AC signal amplification while IC53 provides the correct bias conditions for IC51 that keep a low DC offset at its output.

Input Protection

The effects of excessive voltage or current at the terminals of the fixture are controlled by the diode bridges BR1 and BR2, diodes D12 and D11, and fuse FS2. FS2 is a surface mount component, placed directly on the main board near the fixture.

Switched Precision Resistor

In practice a single value of precision resistor is unable to deal with the full range of currents through the DUT. Three precision resistors, R73, R74 and R4 are used. The lowest value of these is R74 and this is switched using relay RL1. R73 is permanently in circuit, the remaining resistor, R4 is switched with CMOS gates in IC1.

V - I Select Switch and Differential Amplifier

The differential amplifier formed by IC59, IC62, IC63 is used to measure the voltage across the DUT and the precision current sense resistor. This is achieved using the CMOS switches in IC57 and IC58. The switches also have a third option that is to ground the differential amplifier inputs.

Switched Gain Amplifier

IC98 is an inverting amplifier that has a selectable gain under the control of the CPU using the switches in IC94. The amplifier has a maximum gain of 7.

Low Pass Filters

Following IC98 is a switched low pass filter designed to pass the measurement frequencies of 100/120Hz, 1kHz and 10kHz but suppress noise at higher frequencies. The three filter networks, one for each DUT stimulus frequency, are selected by the CPU using IC67.

Overload Detector

Comparator IC69 provides an indication to the CPU when the measurement signal at its input has exceeded 8 volts peak to peak. The output of IC69 drops to 0 volts to indicate an overload. The network at the output of IC69 has a slow recovery from 0V to lengthen the duration of the overload signal returned to the CPU.

The Phase Sensitive Detector

The phase sensitive converter uses a dual slope integrator based around IC74, IC75 and switches IC88-A, IC88-B, IC89-C IC89-D which are switched synchronously with the DUT stimulus. Phase sensitive measurements are made with the control waveform in phase or in quadrature with the DUT stimulus. Five sub measurements are required for a complete measurement. These are -

Auto Zero
In- Phase current
Quadrature current
In- Phase voltage
Quadrature voltage

De-integrate mode is provided by opening switches IC88-A, IC88-B and closing IC88C. The de-integrate current is defined by reference D14 and R155. Reference D13 and resistors R158, R159 provide a bias to the integrator that ensure that the output of IC74 is always positive. When the integrator output passes through 0V this condition is detected with comparator IC75. IC87-A level shifts the output of IC75 to normal digital levels.

Sinewave Generator

IC45 receives a clock at 10 times the test frequency via buffer and level shifter IC44. IC45 together with resistors R33 – R36 produce a sinewave approximation at S1 (TP64). The amplitude of this waveform is controlled by adjustment of the supply voltage of IC45. This supply voltage is obtained from DAC IC96 and buffer IC90-A. The DAC has serial control supplied with data from the CPU. IC45 has a supply voltage between 5V and 10V. The sinewave at S1 is not symmetrical about 0V, but has a centre that shifts with the amplitude. IC90-A provides level shifting and buffering. It restores the 0V of the sinewave at its centre.

Band Pass Filters

The output of the sinewave generator has to be filtered to remove unwanted harmonics. This is done with a low pass filter that is selected for each frequency of operation. The circuit consists of three filters based around the following ICs:

IC92-A and IC92-B for 100 or 120Hz

IC91-A for 1kHz

IC91-B for 10kHz

IC95 and CMOS switches in IC48 select one of the three filters and pass the output to the DUT drive amplifier. IC95 has an additional switch IC93 that is used to provide a reduced output level required for some of the internal calibration procedures.

Drive Amplifier

IC50 provides the output voltage that is the DUT stimulus. IC52 biases IC50 so that its DC content is close to zero. Q1 is under the control of the CPU. When Q1 is turned on the reference voltage for IC52 is altered, causing the DC output level of IC50 to rise to 2 volts. D7 and D8 give protection against excessive voltage at the test fixture, with R63 limiting the maximum current that can be supplied into a low impedance across the test fixture.

Buffering of logic control lines

The measurement circuits operate from ±7.5 volt rails and the associated CMOS switches need level shifting buffers in order to interface with the CPU and FPGA. This is done in a variety of ways. Control lines that carry precisely timed clocks are interfaced through LM311 comparators, IC44, IC71, IC72. Slowly changing control lines are buffered using 7407 open collector drivers in IC55 and IC84 or with operational amplifiers used without feedback, as IC2 is.

CPU, RAM and ROM

The majority of the digital hardware in the instrument is contained in the micro processor CPU, IC10, and a Field Programmable Gate Array, IC102. The Z80180 CPU contains an 8 bit Z80 core, 2x16 bit counter-timers, 2x8 bit serial interfaces and a memory management unit. The CPU is clocked at 12MHz by IC33-A.

IC11 provides 128K bytes of RAM and IC12 128K bytes of ROM. The address decoding for the RAM and ROM is done inside the FPGA, IC102.

FPGA

The FPGA (Field Programmable Gate Array) contains

Programmable dividers for producing the sine generation clock.

Counter for the dual slope integrator

PSD drive waveform generator

RAM and ROM address decoding

Keyboard interface

Multiplexed display drivers

Watchdog Timer and Reset

IC7 provides system reset. The reset output on pin 7 is held low until the +5VD supply has reached a minimum of 4.5 volts. IC7 also monitors the unregulated supply voltage and the software activity. The CPU strobes the ST input on pin 5 at regular intervals. If a strobe fails to be received within approximately 0.5 seconds of the previous, a reset is generated, restarting the CPU.

Serial EEPROM

IC13 is a CMOS 32768-bit serial EEPROM. This is used to provide non-volatile data storage of calibration constants and binning data.

120 Hz Link Option

The LCR400 can be made to operate at 120Hz rather than 100Hz by placing a link on the pins marked LK2. The condition of this link is checked by the CPU only during the initialisation that occurs immediately after a reset. If LK2 is changed the instrument will need to be recalibrated at the new frequency setting.

Display and Keyboard

The display is multiplexed and driven from the FPGA via buffers IC103, IC104, IC25 and IC28 on the display/keyboard pcb. The display is refreshed every 20 ms at a rate of one digit every 2.5 ms. The keyboard also interfaces with the FPGA. The eight lines PJ5 S-Z are normally held at logic high. Pressing a key will pull up one of the input lines PJ5 N-R and the CPU will then respond by scanning the eight lines PJ5 S-Z, setting a logic low on each in turn, until the location of the pressed key is found.

RS232 Serial Interface

The RS232 interface is provided directly by the CPU and is buffered to the rear panel connector, PJ4, by IC76 and IC77.

Power Supplies

A separate power supply pcb carries the mains inlet, primary fuse FS1 and mains transformer. C7, C8, FB2 and FB3 are EMI countermeasures. The transformer secondary is connected to the main pcb via PJ3. On the main pcb the centre tapped secondary provides, together with diode bridge D1-4 and C5,C6, an unregulated supply of nominally ±13 volts, which feeds 6 regulators. These provide rails that are directed to the digital or analogue parts of the circuit. The + 5 volt digital supply is a high efficiency switching regulator operating at 150kHz consisting of IC6, D5, L1, C17 and C18. The remaining 5 regulators are all linear types. These supply –5 volt digital, ± 5 volt analogue and ± 7.5 volt analogue. IC3 and IC4 are fitted with heat sinks.

The required supply values are

Supply Name	Nominal Voltage	Tolerance
+5VD	+5.0	±0.2V
–5VD	-5.0	±0.2V
+5VA	+5.0	±0.2V
+5VA	–5.0	±0.2V
+7V5	+8.15	±0.4V
–7V5	–7.77	±0.4V

Calibration & Diagnostics

General

The LCR400 has a test mode which gives access to a number of test functions, including calibration.

The test mode is accessed as follows:

1. With the rear panel Power switch OFF, hold down the **Enter** key and switch ON; every LED and display segment should illuminate to test the display.
2. Momentarily release and press the **Enter** key again; the display will show the firmware revision whilst the **Enter** key is momentarily released and will show `test 00` when the Enter key is pressed again.
3. To select a particular test function, enter the 2-digit number corresponding to that function (from the list in the next section) and press **Enter** again.
4. Exit test mode by entering **99** followed by **Enter**.

Test Functions

The complete list of test functions available is given below. The test modes permit direct setting of certain functions for the purpose of fault-finding; with the exception of calibration they are of no use in a fully-functional instrument.

00 **Set Test Defaults -** Sets the following conditions:

1. 1kHz
2. Bias Off
3. Differential Amplifier switched across DUT
4. Amplifier at low gain
5. Sense resistor switched to lowest value
6. Normal test level = R190 feedback around IC95 switched OUT.

01 **Set operating frequency to 100Hz**

02 **Set operating frequency to 120Hz**

03 **Set operating frequency to 1kHz**

04 **Set operating frequency to 10kHz**

05 **Normal DUT level -** Set Normal test level – R190 feedback around IC95 switched out.

06 **Low DUT level -** Switch in R190 to reduce the gain of IC95 by 26dB, giving a signal level across the DUT in the range of 10-20mV. This is useful for testing the Amplifier, where a normal signal level would cause it to overload.

07 **DAC Max level -** CPU writes 0x3FF to the DAC, setting it at its maximum output.

08 **DAC Min level -** CPU writes 0 to the DAC, setting it at its minimum output.

09 **DAC Mid level -** CPU writes 0x1FF to the DAC, setting it at the mid point output.

10 **Select Zero -** Set the control lines IVA, IVB to connect the differential amplifier input to 0 volt ground.

11 **Select DUT voltage -** Set the control lines 1VA, 1VB so that the differential amplifier is connected across the DUT.

12 **Amplifier IN -** Set control line AMP to switch amplifier IC98 to high gain.

13 **Amplifier OUT -** Clear control line AMP to switch amplifier IC98 to low gain.

14 **Select DUT current, low resistor -** Set the control lines IVA, IVB so that the differential amplifier is connected across the lowest value precision current sense resistor, R74 and set the relay RL1 and switch IC1 to select R74 as the current sense resistor.

15 **Select DUT current, high resistor -** Set the control lines IVA, IVB so that the differential amplifier is connected across the precision current sense resistor, R73 and set the relay RL1 and switch IC1 to select R73 as the current sense resistor.

16 **Select DUT current, extra high resistor -** Set the control lines IVA, IVB so that the differential amplifier is connected across the precision current sense resistors, R74 in series with R4 and set the relay RL1 and switch IC1 to select R74 in series with R4 as the current sense resistor.

17 **Bias OFF –** bias Q1 off.

18 **Bias ON** – bias Q1 on.

28 **Execute Amplifier Calibration** – see next section.

29 **Execute DUT Voltage Calibration** – see next section.

30 **Execute PSD Calibration** – see next section.

99 **Exit test and calibrate mode**

Calibration

Calibration of the LCR400 is 'closed box' with calibration constants stored in EEPROM. No equipment is required for calibration other than a DMM to check the voltage across the DUT. However, traceable validation of calibration will require access to precision components whose values are known to a high accuracy, e.g. transfer standards.

Calibration should be performed after the instrument has warmed up for at least 30 minutes in a temperature-controlled environment.

Calibration Overview

Calibration constants stored in EEPROM are used to set the signal level across the DUT for each operating frequency and to provide an accurate value of gain for the switched signal amplifier (IC98 and associated components) to the maths routines, again at each operating frequency. To get the calibration constants into EEPROM there are 3 calibration procedures:

1. **DUT Voltage Calibration:** Sets an open-circuit test voltage of 300mV ±10mV at each frequency.
2. **Amplifier Calibration:** Measures the gain of the switched signal amplifier at each frequency.
3. **PSD Calibration:** Calibrates the absolute gain of the PSD, i.e. the relationship between the PSD value read by the microprocessor and the voltage across the DUT.

The EEPROM constants resulting from 1 and 2 are accessed when the instrument initialises itself at power-up. The results of 3 are used only during the full calibration procedure to improve the accuracy of 1.

Re-calibration of a functional instrument requires only Amplifier Calibration (2) and a check that the DUT voltage is within limits. A full calibration should only be required if components have been changed.

Routine Calibration

Routine calibration of a functional instrument requires only Amplifier Calibration (Test 28). If any components have been changed it is recommended that the full calibration procedure is followed (next section).

1. Ensure that the Kelvin connectors are clean. Place a 100kΩ resistor in the connectors.
2. Set the LCR400 in Test mode (see General).
3. Key in test **2 8** followed by **Enter** to initiate calibration.

   The calibration procedure uses the average of a number of readings and proceeds automatically through each of the operating frequencies; the display tracks the measurements as they proceed. When the last calibration constant has been stored in EEPROM the display reverts to **`test 28`**. Total test time is approximately 1 minute.
4. Exit Test Mode (key **9 9** followed by **Enter**).

5. Check that the DUT voltage, measured across the 100k resistor with a DMM, is 300mVrms ± 10mV at each operating frequency.

   Note: Ensure that the DMM is specified for AC measurements to 10kHz.

Full Calibration

If any components have been changed it is recommended that the full calibration procedure is used. This involves doing the PSD Calibration (Test 30) and DUT Voltage Calibration (Test 29) prior to the Amplifier Calibration (Test 28) described above.

PSD Calibration

This calibration stage requires the DUT voltage to be measured with a DMM capable of AC measurements to 10kHz.

1. Ensure that the Kelvin connectors are clean and making reliable low impedance contact.
2. Set the LCR400 in Test Mode (see General).
3. Set the frequency at which the calibration is to be made (**01 Enter** for 100Hz, etc.).
4. Set the PSD Calibration mode by keying **3 0 Enter**; the display continues to show **`test 30`**.
5. Measure the DUT voltage, taking care not to separate the Kelvin connectors with the DMM probes.
6. Enter the DUT voltage in mV (e.g. **360**); the number entered will show in the left-hand display. Press **Enter**; the display should revert to **`test 30`**.
7. Repeat steps 3 to 6 inclusive for the other test frequencies. Note that a calibration can be made at 100kHz **or** 120Hz, not both; only one calibration is stored for the 100/120Hz range.
8. Continue to the DUT Voltage Calibration.

DUT Voltage Calibration

1. First complete the PSD Calibration described above.
2. Set the DUT Voltage Calibration mode by keying **2 9 Enter**. There is no indication that the test has completed; monitoring the voltage at the Kelvin connectors with a DMM shows the microprocessor using a successive approximation technique at each of the 3 operating frequencies. The test is completed in approximately 30 seconds.
3. Exit the Test Mode (by keying **9 9 Enter**).
4. Check at each frequency that the test level is 300mV ± 10mV.

Amplifier Calibration

Follow the Amplifier Calibration procedure described in 1 – 4 of the Routine Calibration section above.

Calibration Certification

Calibration can only be validated by measuring precision Rs, Ls and Cs whose values are known to an accuracy of 0.02% or better, e.g. laboratory transfer standards. Standard inductors and capacitors are generally physically very large and will need to be connected to the LCR400 using the BNC 4-terminal interface module (available as an optional accessory) and screened cables.

The connectors of the interface module are labelled High drive, High Sense, Low Sense and Low Drive. The High Drive and High Sense signals are connected together at the 'High' terminal of standard component; the Low Drive and Low Sense signals are similarly joined at 'Low' terminal.

The screens of the Drive coax cables should be connected together at the standard component and to the 'ground' of the component (usually the case). The screens of the Sense leads should be isolated both from each other and from the 'ground' of the component. Keep the connecting leads as short as reasonably possible.

PCB ASSY – MAIN (44812-0700)

Part Number	Description	Position
20670-0340	HEATSINK TO220 CLIP-ON	SKIC3,SKIC4
22040-0920	BEAD FERRITE – LEADED	FB1
22042-0370	INDUCTOR 100uH 3AMP	L1
22247-9605	RELAY MINI 2P C/O LATCHING	RL1
22315-0450	FUSE 500mAT SUBMIN PCB MNT	FS3,4
22315-1000	FUSE SM1206 500MA (F) 63V	FS2
22451-0203	SOLDER TAG M3	KELVIN CONNECTORS TO PCB
22573-0041	HEADER 2WAY STR	LK1, 2
22573-0050	HEADER 9WAY STR	PJ7
22573-0211	HEADER 3 WAY STR F/LOCK .156	PJ3
22575-0064	HEADER 26 WAY (2X13) STR	PJ5,8
22575-0065	HEADER 20 WAY (2X10) STR	PJ6
23105-0820	RES SM0805 82R0F W1	R223-238
23105-1100	RES SM0805 100RF W1	R62,75,146,147,156,160,191,194
23105-1120	RES SM0805 120RF W1	R16
23105-1240	RES SM0805 240RF W1	R13
23105-1470	RES SM0805 470RF W1	R76,80,81,84,85,86,91,92,119,190
23105-1620	RES SM0805 620RF W1	R15
23105-2100	RES SM0805 1K00F W1	R1,3,23-72,148,157,161,166,167,192
23105-2130	RES SM0805 1K30F W1	R14
23105-2180	RES SM0805 1K80F W1	R138,141,144
23105-2220	RES SM0805 2K20F W1	R71,93,94,139,142,145,171,172,195
23105-2330	RES SM0805 3K30F W1	R163,165
23105-2360	RES SM0805 3K60F W1	R58,59
23105-2390	RES SM0805 3K90F W1	R193
23105-2470	RES SM0805 4K70F W1	R137,140,143,169,176,202,203,207,208,253
23105-2910	RES SM0805 9K10F W1	R34,35,196,209
23105-3100	RES SM0805 10K0F W1	R7,19,40,56,57,60,64,65,67,68,69,113,115,117,118,129,173,174,175,177,178,185,186,198,199,204,205,210-217
23105-3150	RES SM0805 15K0F W1	R8,33,36,66,82,83,154,168,170,180
23105-3200	RES SM0805 20K0F W1	R206
23105-3220	RES SM0805 22K0F W1	R187,188,189,218-222,239-245,247,248

PCB ASSY – MAIN (44812-0700) continued/...

Part Number	Description	Position
23105-3360	RES SM0805 36K0F W1	R184
23105-3470	RES SM0805 47K0F W1	R78
23105-3620	RES SM0805 62K0F W1	R6,179,181
23105-4100	RES SM0805 100KF W1	R5,79,120,152,249-252
23105-4150	RES SM0805 150KF W1	R182,183
23105-4390	RES SM0805 390KF W1	R158,159
23105-4470	RES SM0805 470KF W1	R77,155,162,164
23105-5100	RES SM0805 1M00F W1	R70
23202-0330	RES 33R0F W25 MF 50PPM	R63
23215-2100	RES 1K00B W25 MF 15PPM	R151
23215-2332	RES 3K32B W25 MF 15PPM	R149
23215-2470	RES 4K70B W25 MF 15PPM	R150
23216-0300	RES 30R0Q RADIAL FOIL.02% 5PPM	R74
23216-2200	RES 2K00Q RADIAL FOIL.02% 5PPM	R73
23216-3500	RES 50K0Q RADIAL FOIL.02% 5PPM	R4
23222-0100	RES 10R0J W33 MF FUSIBLE NFR25	R11,12,17
23222-1100	RES 100RJ W33 MF FUSIBLE NRF25	R197,201
23424-0443	CAP10NZ 1KV CER D10 P5	C1-4
23427-0325	CAP10NZ 63V CER HI K P5	C19,22
23427-9205	CAP47PJ 100V CER NPO P2.5	C67
23427-9236	CAP18PJ 100V CER NPO P2.5	C20,28,100
23428-1100	CAP 100PG 100V CER NPO P2.5	C27,29,65,75,89
23428-1180	CAP 180PG 100V CER N750 P2.5	C35,36
23428-1220	CAP 220PG 100V CER N750 P2.5	C68,69,77
23461-0020	CAP SM0805 100NZ 50V CER Y5V	SC1-10,19-27,38-67,71-99
23557-0611	CAP 47U 10V ELEC RE2 P2	C58
23557-0612	CAP 1U0 100V/50V ELEC RE2 P2	C11,12,15,38
23557-0647	CAP 10U 35V ELEC RE2 P2	C13,14,16,50,52,66,70,71,92,93,99
23557-0662	CAP 2200U 25V ELEC RE2 P7.5	C5
23557-0664	CAP 1000U 35V ELEC RE2 P5	C6
23557-0667	CAP 220U 25V ELEC RE2 P3.5	C17,18
23620-0244	CAP 470NK 63V P/E P5	C30,33,37
23620-0246	CAP 100NK 63V P/E P5	C31,32,34,94,98
23620-0247	CAP 220NK 63V P/E P5	C47
23620-0252	CAP 2N2K 63V P/E P5	C88
23620-9007	CAP 10NK 100V P/E P5	C90
23662-0240	CAP 1N50J 100V P/C P5	C87

PCB ASSY – MAIN (44812-0700) continued/...

Part Number	Description	Position
23662-0310	CAP 22N0J 100V P/C P5	C61,81,95
23662-0330	CAP 220NJ 63V/100V P/C P5	C60,84,86
23662-0360	CAP 33NJ 100V P/C P5	C85
23662-0370	CAP 100NJ 100V P/C P5	C78
23685-0002	CAP 1N0J 100V P/P	C80
23685-0004	CAP 2N2J 100V P/P	C62,63,83
23685-0012	CAP10NJ 100V P/P P5	C96
23685-0015	CAP 470PJ 100V P/P P5	C64,72,73
23685-0016	CAP 47NK 100V MIN P/P P5/7.5	C49,59,79
23685-0322	CAP 220PJ 100V P/P P5	C82
25021-0901	DIO 1N4148	D16
25031-0130	DIO 1N5821	D5
25115-0907	DIO 1N4002 R	D1-4,11,12,15
25130-9207	DIO ZEN 5V6 W5	D7,8
25131-0226	DIO ZEN 6V2 1W3	D6
25211-9302	RECTIFIER BRIDGE W02G	BR1,2
25336-5590	TRAN PNP BC559C	Q1
27103-1000	IC SM LM311	IC44,69,71,72
27106-1040	IC SM AD711JR	IC59,62
27106-1120	IC SM NE5534	IC50,51,95
27106-1130	IC SM OP27GS	IC52,53,63,98
27106-1200	IC SM NE5532	IC64,90,91,92
27107-0071	IC SM TL071	IC2,54,56,74,75
27153-1040	IC SM TLC5615CD 10-BIT DAC	IC96
27155-0140	IC SM DS1705 3.3/5V MONITOR	IC7
27160-0011	IC V/REG 78L05	IC97
27160-0012	IC V/REG 79L05	IC99,101
27160-0027	IC V/REG LM2595T50	IC6
27160-0200	IC V/REG LM317	IC3
27160-0210	IC V/REG LM337	IC4
27161-0120	IC V/REF ZRA245 2.45V	D13,14
27219-0070	IC SM 7407	IC55,84
27227-0010	IC SM 4001	IC60,85,86
27227-0160	IC SM 4016	IC1,57,58,87,88,89
27227-0180	IC SM 4018	IC45
27227-0520	IC SM 4052	IC48,61,67
27227-0530	IC SM 4053	IC93,94

PCB ASSY – MAIN (44812-0700) continued/...

Part Number	Description	Position
27236-0530	IC SM 74HC4053	IC78
27239-0740	IC SM 74HC74	IC33
27253-0020	IC SM 64180	IC10
27253-0050	IC SM 14C88	IC76
27253-0060	IC SM 14C89	IC77
27255-0540	IC SM XC95216	IC102
27400-0110	IC 27C1001 128Kx8 EPROM	IC11
27403-0050	IC SM X25320 32K(4Kx8) EEPROM	IC13
27413-0430	IC SM 128Kx8 RAM 70ns	IC12
28515-0060	OSC MODULE - 24MHz	OSC1
31331-0700	SCREEN	
31331-9030	SCREEN PCB MOUNT	SCRN1, 2, 3
35555-2850	PCB - MAIN	
43171-2120	CONN ASSY RS232 (10W)	

PCB ASSY - PSU (44812-0710)

Part Number	Description	Position
22040-0920	BEAD FERRITE - LEADED	FB2,3
22115-0480	TRANSFORMER	T1
22219-0120	SWITCH ROCKER SPST R/A PCB MNT	SW1
22312-0260	FUSEHOLDER PCB MOUNT	FOR FS1
22315-0239	FUSE 125MA TL HRC	FS1
22520-0190	AC RECEP 10AMP R/A SOLDER MTG	PJ1
22573-0211	HEADER 3 WAY STR F/LOCK .156	
23185-0000	RES ZERO OHM	LK4
23424-0459	CAP 4N7 250V AC CER STR/LNG Y	C7,8
35515-1610	PCB - PSU	

PCB ASSY DISPLAY/KEYBOARD (44812-0720)

Part Number	Description	Position
22226-0101	KEYSWITCH	K1-32
22575-0015	HEADER 26W (2X13) R/ANG	PJ5,8
23202-0820	RES 82R0F W25 MF 50PPM	R11-26
23202-1560	RES 560RF W25 MF 50PPM	R1-10
23301-9102	RES NETWK SIL 10K X 8	RP1,2
23427-9215	CAP10NZ 63V CER HI K P2.5	C54,56-58
23557-0647	CAP 10U 35V ELEC RE2 P2	C59
25061-0200	LED - T1 ROUND (3mm) - RED	LED25-34
25061-0205	LED - INDICATOR 6.3MM X 3.7MM	LED1-22

PCB ASSY DISPLAY/KEYBOARD (44812-0720) continued/...

Part Number	Description	Position
25061-0519	DISPLAY 3 DIG .56 LED 9MM LEG	DIS1-4
27164-0506	IC ULN-2803A	IC25,28
27229-2440	IC 74HCT244	IC103,104
35555-2860	PCB - DISPLAY/KEYBOARD	

MECHANICAL PARTS

Part Number	Description	Position
22315-0239	FUSE 125MA TL HRC	FOR 230V VERSION
22315-0232	FUSE 250MA TL HRC	FOR 115V VERSION
22491-0120	MAINS LD 2M ST IEC/UK PLUG 5A	UK PLUG
22491-0270	MAINS LD 2M ST IEC/EUR0 PLUG	EURO PLUG
22491-0040	MAINS LD 2/2.5M ST IEC/USA PLUG	USA PLUG
37522-0160	LABEL SER NO - THURLBY-THANDAR	
48581-1300	INSTRUCTION BOOK	
20030-0263	WASHER M3 ZPST	SMALL JAWS, LARGE JAWS TO JAW SUPPORT
20030-0264	WASHER M2.5 ZPST	LARGE JAWS TO JAW SUPPORT, LARGE JAWS TO CONTACT
20030-0266	WASHER M4 ZPST	SAFETY EARTH
20037-0401	SOLDER TAG SHAKEPROOF - 4BA	SAFETY EARTH
20038-9501	WASHER M3 SPRING	PCBS TO HEX SPACERS, SMALL JAWS, LARGE JAWS TO JAW SUPPORT, CHASSIS TO HEX SPACERS
20038-9502	WASHER M4 SPRING	SAFETY EARTH
20062-9301	SCREW No.4x3/8in. POZI PAN	TOP MOULDING TO COVER
20063-0010	SCREW NO6 X 3/8 NIB HDPZ ST/AB	COVER TO CHASSIS, JAW SUPPORT TO PCB
20065-0020	SCREW 2-28 X 5/16 PLAS PNHDPZ	SIDE MOULDINGS TO CHASSIS
20065-0090	SCREW K22 X 5 PT LN1442 PNHDZ	KEYBOARD PCB TO MOULDING, LARGE JAW TO JAW SUPPORT, LARGE JAWS TO CONTACT.
20162-0010	SCREWLOCK D TYPE 4-40 UNC PAIR	
20210-0101	NUT M3 ZPST	SMALL JAWS, LARGE JAWS TO JAW SUPPORT
20210-0102	NUT M4 ZPST	SAFETY EARTH
20213-0040	CAPTIVE NUT SPIRE NO.6	COVER TO CHASSIS
20234-0017	SCREW M3 X 5 PNHDPZ ZPST	HEX SPACERS TO CHASIS
20234-0024	SCREW M3 X 16 PNHDPZ ZPST	LARGE JAWS TO JAW SUPPORT
20234-0025	SCREW M3 X 12 PNHDPZ ZPST	SMALL JAW TO SMALL JAW
20234-0027	SCREW M3 X 6 PNHDPZ ZPST	PCB TO HEX SPACERS

MECHANICAL PARTS continued/...

Part Number	Description	Position
20236-0010	SCREW M4 X 12 TAMPERPROOF	SAFETY EARTH
20612-0011	WASHER FIBRE M3	PCB TO HEX SPACERS
20619-0010	SPRING - PLATED	FOR LARGE JAWS
20653-0210	CABLE TIE 370 X 4.8MM	TO SECURE TRANSFORMER
20661-9111	SPACER Hex M3 x 6 NPBR	MAIN/PSU TO CHASSIS
20662-9301	SELF-ADHESIVE FEET	
22040-0030	FERRITE SLEEVE	FIT TO PSU CONNECTION
22040-0901	BEAD FERRITE FX1115	FIT TO JAW CONNECTIONS
22451-9701	SOLDER TAG 6BA	LARGE JAWS TO CONTACT
22575-0203	SKT3W .156 20AWG IDT	PSU TO MAIN
31711-0130	JAW - LARGE	
31711-0140	JAW - SMALL	
31711-0150	DIVIDER	
33145-0400	BRACKET - JAW SUPPORT	
33147-0150	MOULDING TOP	
33147-0160	MOULDING SIDE L.H.S	
33147-0170	MOULDING SIDE R.H.S	
33331-5840	OVERLAY NAME/LOGO & KEYBOARD	
33533-0390	WINDOW - DISPLAY	
33536-4050	CHASSIS	
33536-4060	COVER	
35358-0540	CONTACT LARGE JAW	
35358-0550	CONTACT SMALL JAW	
37113-2020	KEYCAP (LIGHT GREY)	
43171-2110	CONN ASSY MAIN/KEYBOARD (26W)	

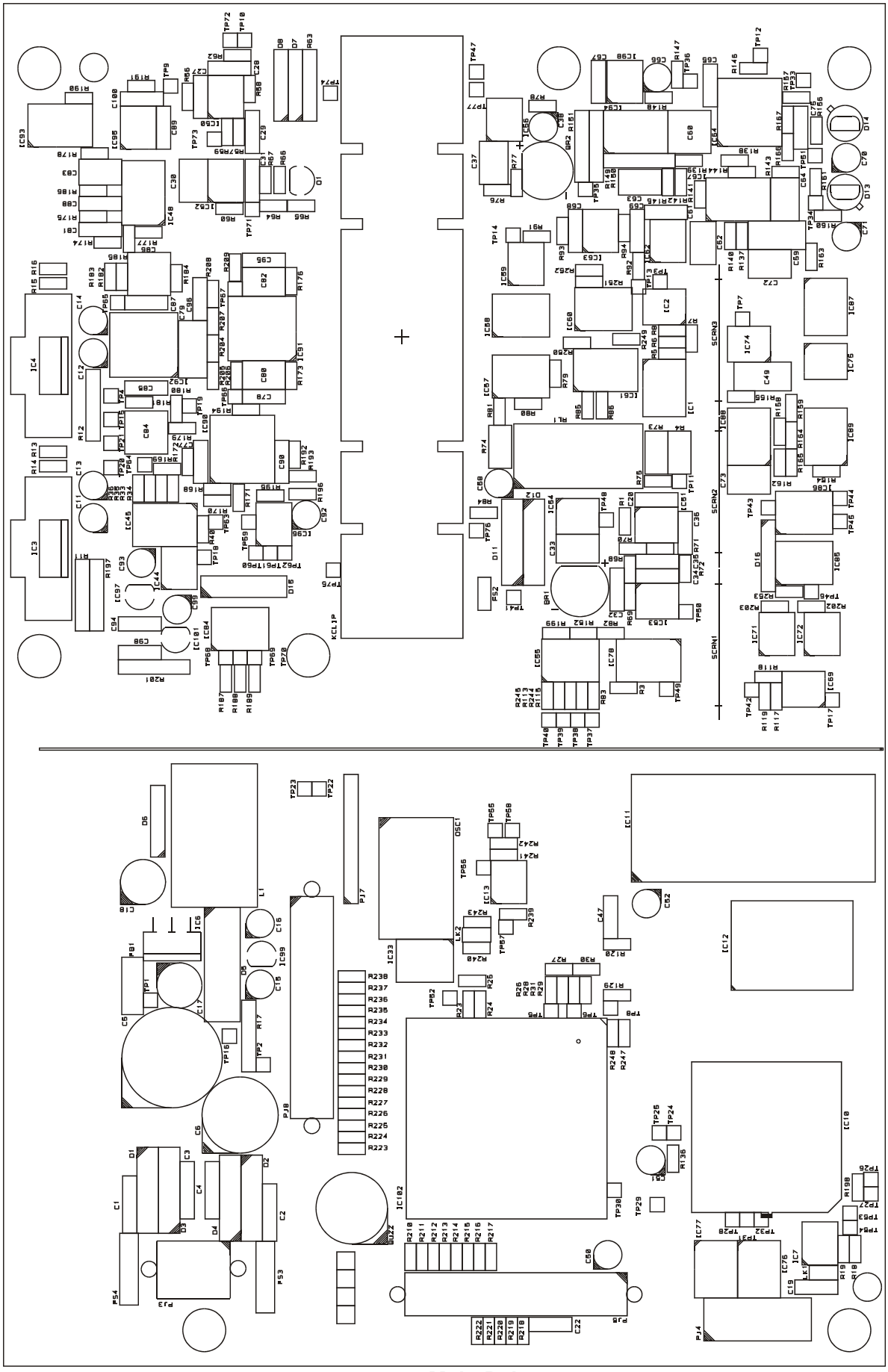

Main Pcb

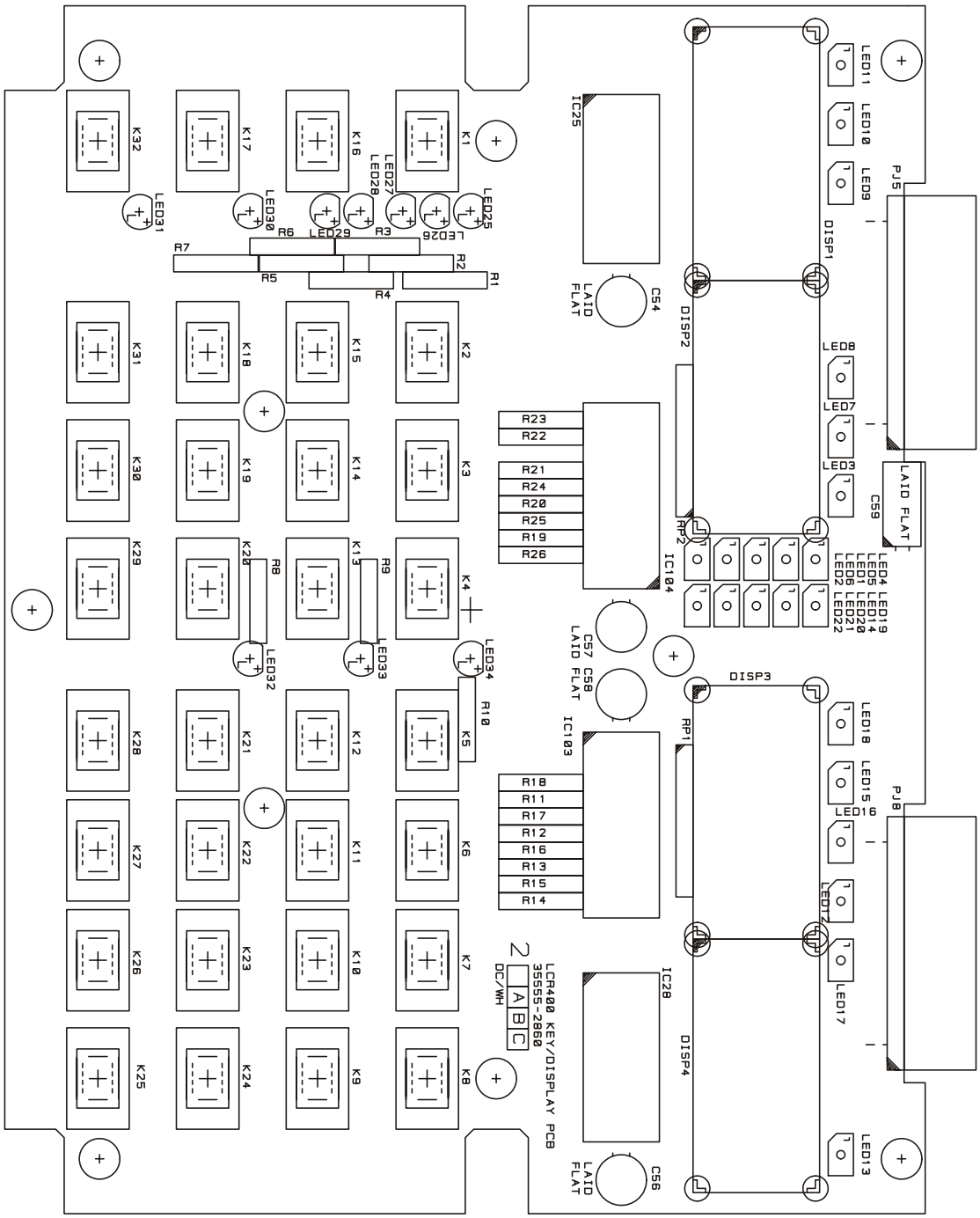

Display/Keyboard PCB

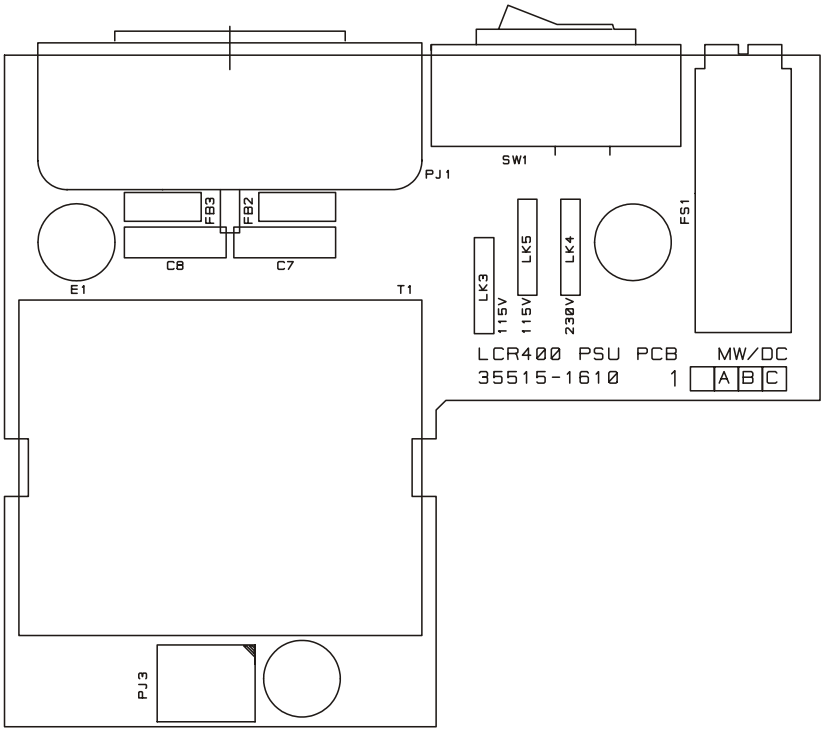

Power Supply PCB

Circuit Diagrams

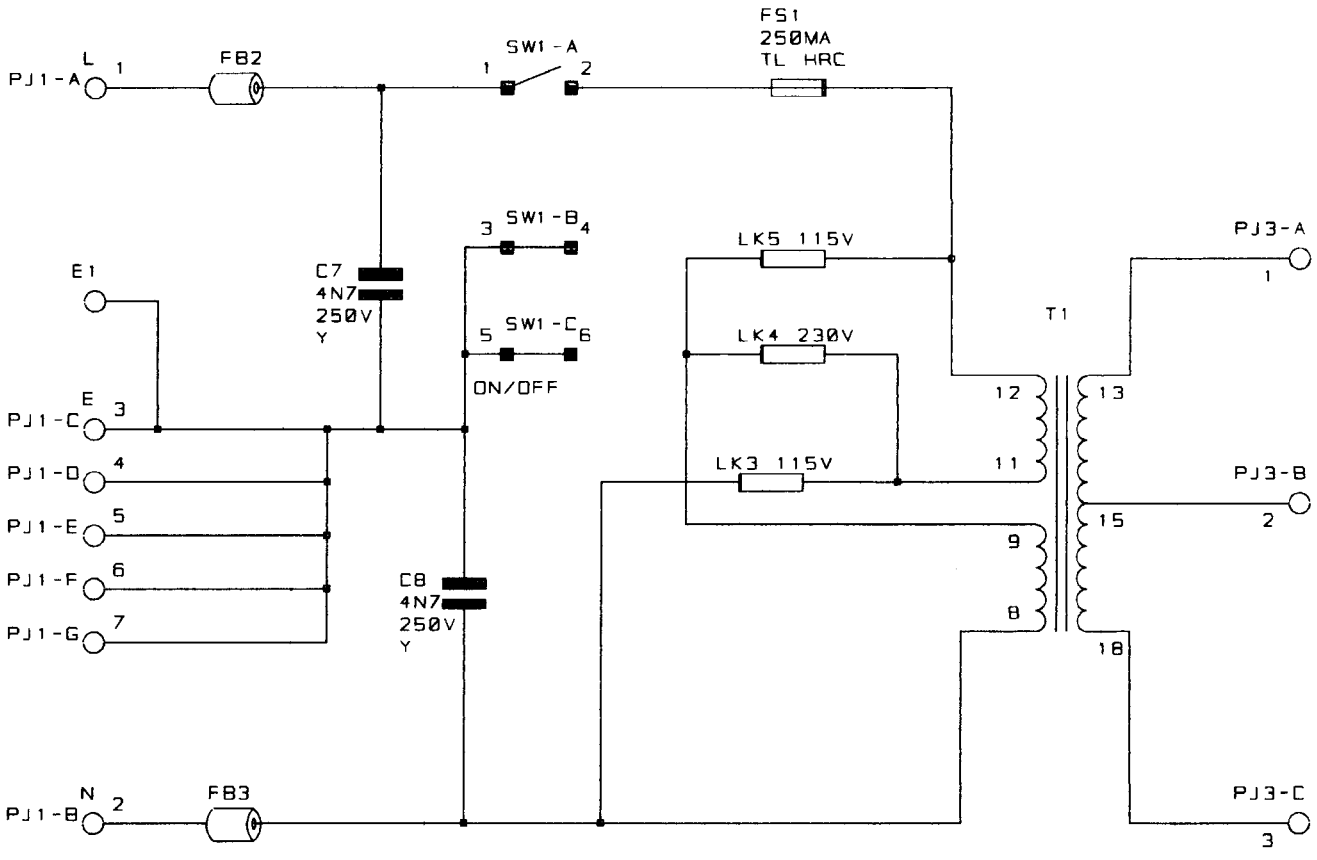

Power Supply PCB

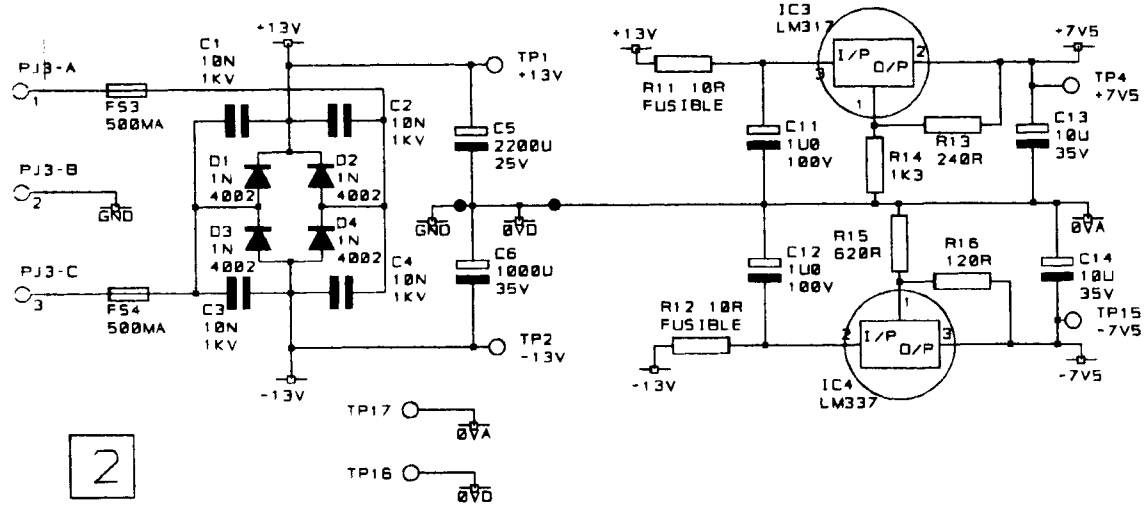

REGULATED DC SUPPLIES

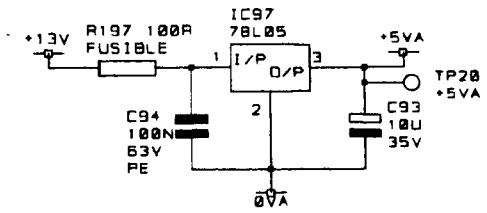

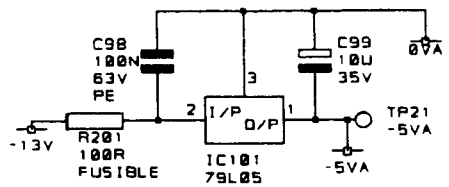

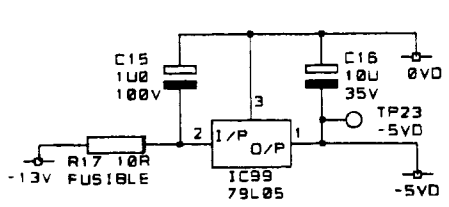

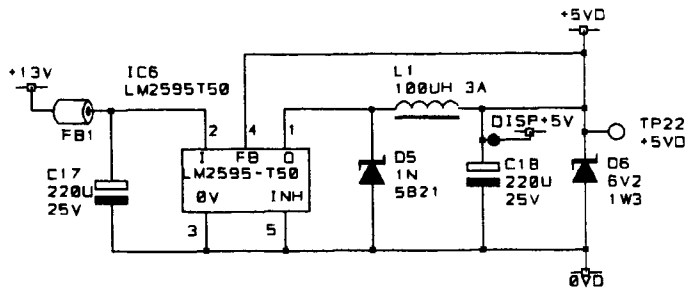

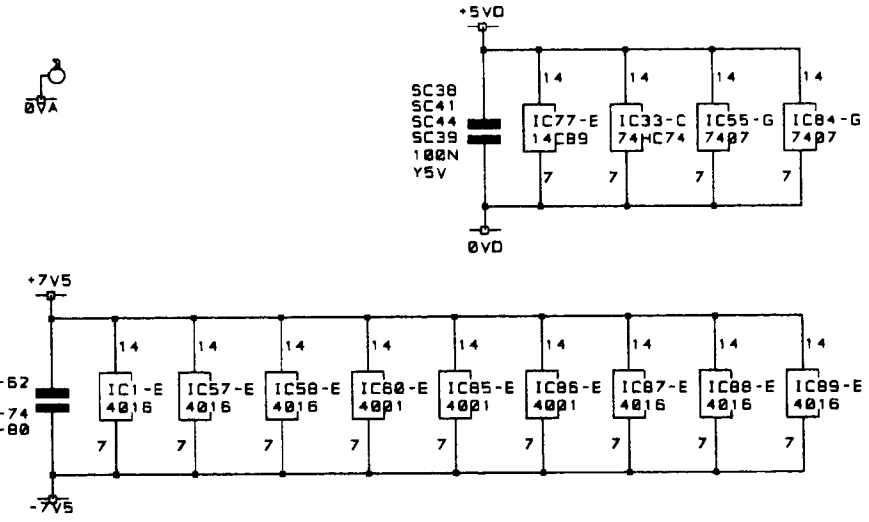

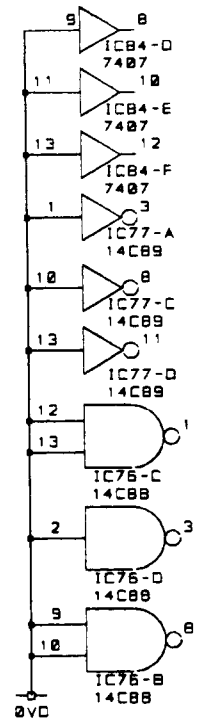

RS232 INTERFACE

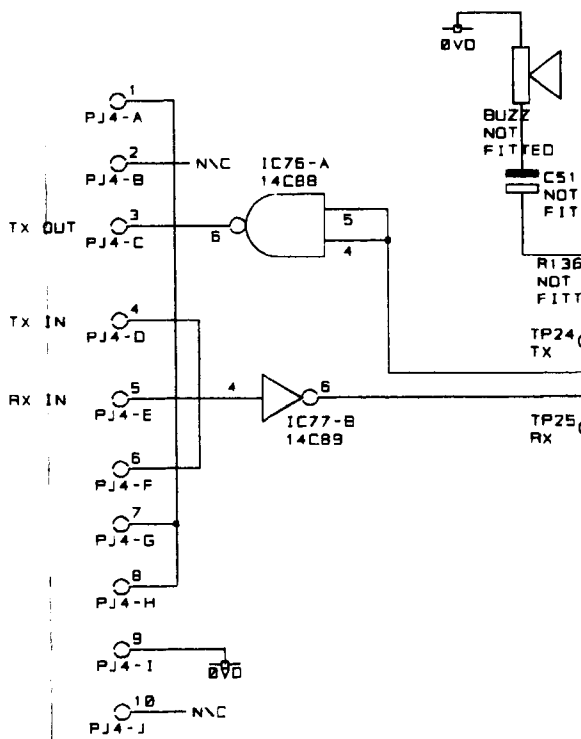

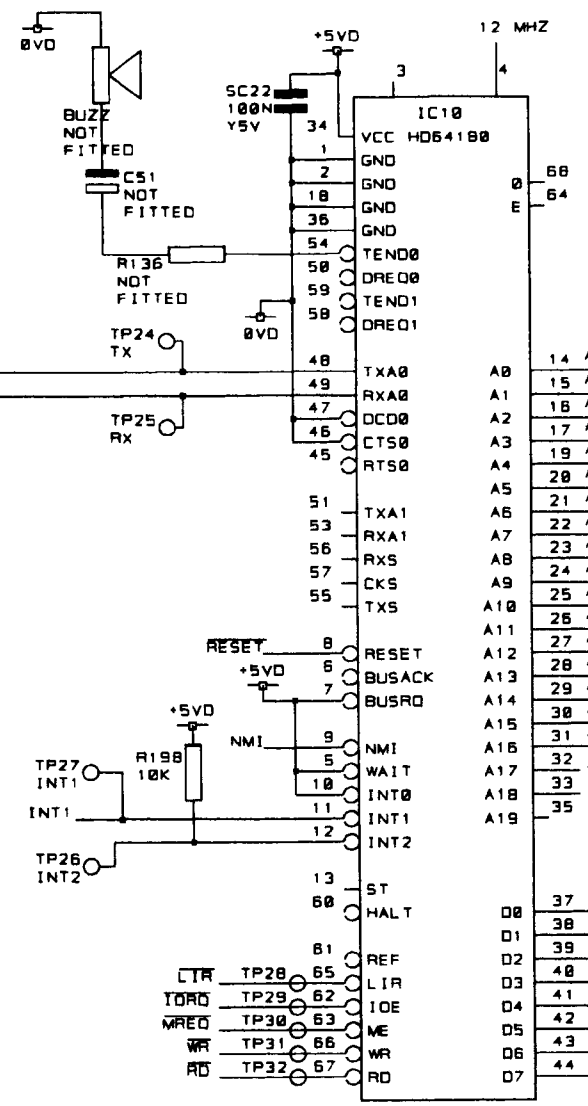

MICROPROCESSOR, RAM, AND ROM

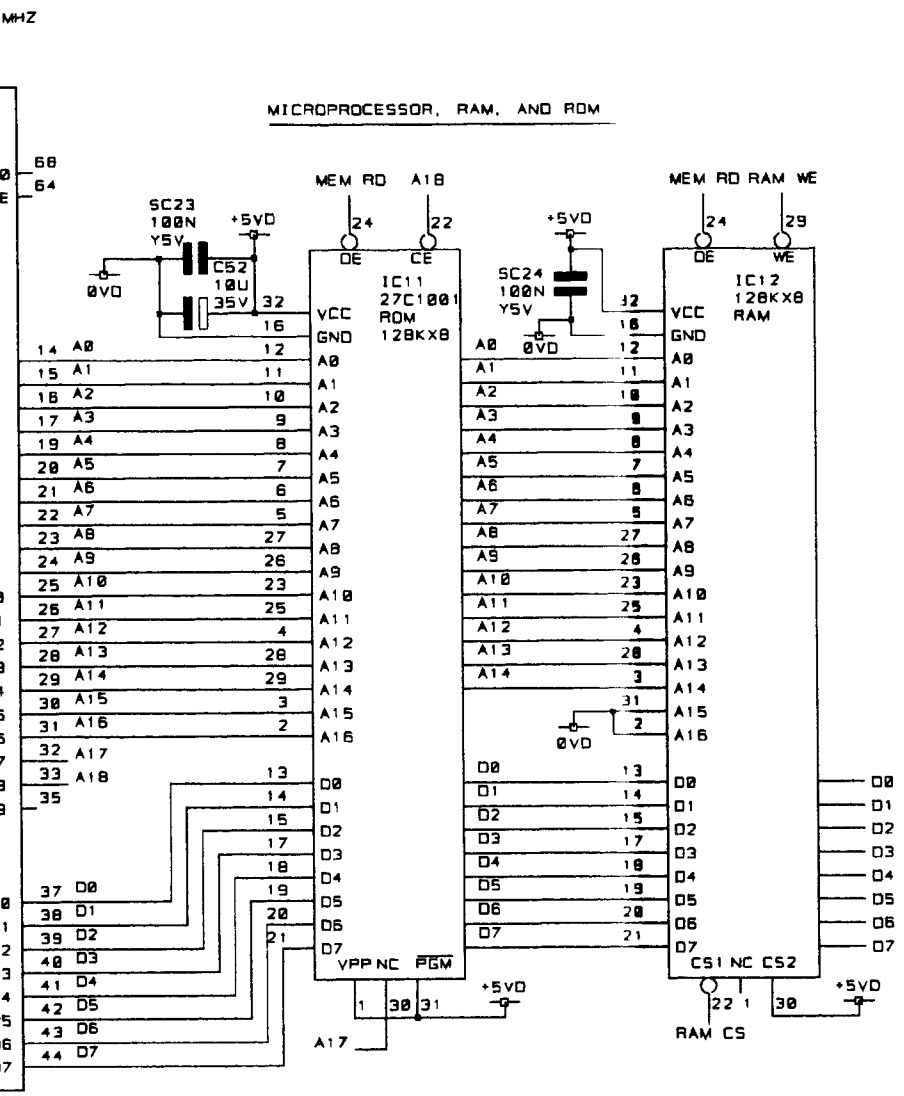

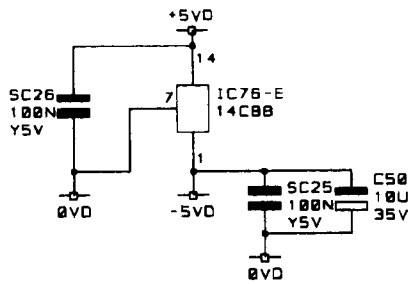

Main PCB Sheet 1 – Voltage Regulators, CPU, RS232

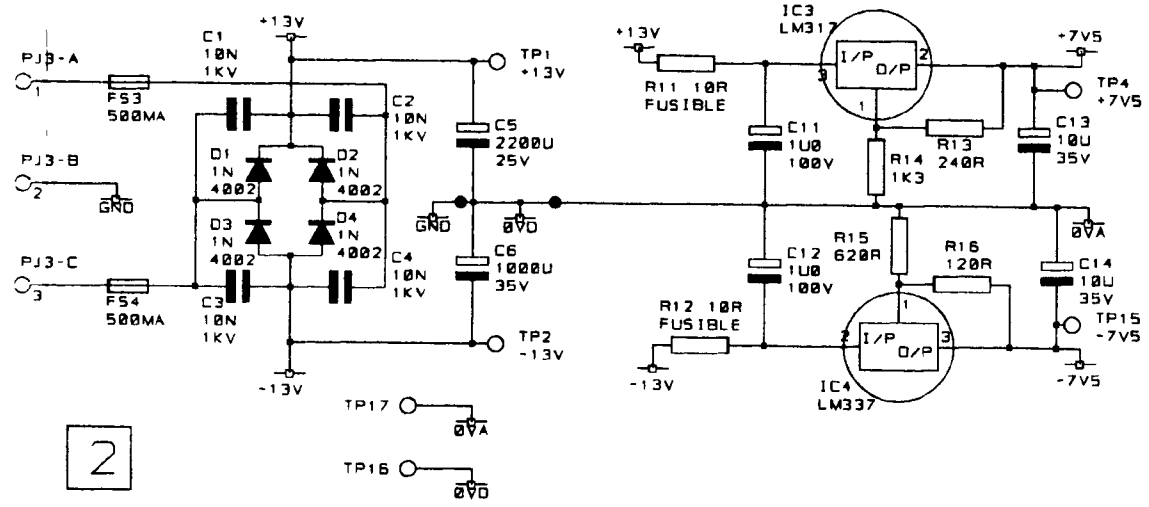

REGULATED DC SUPPLIES

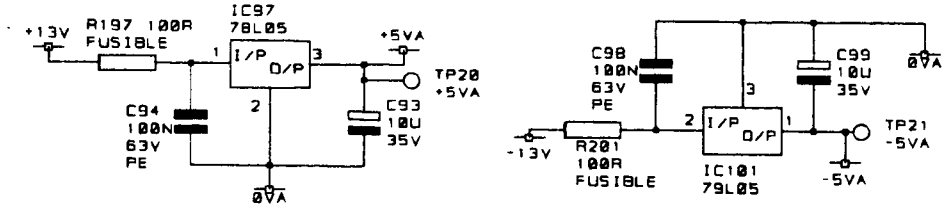

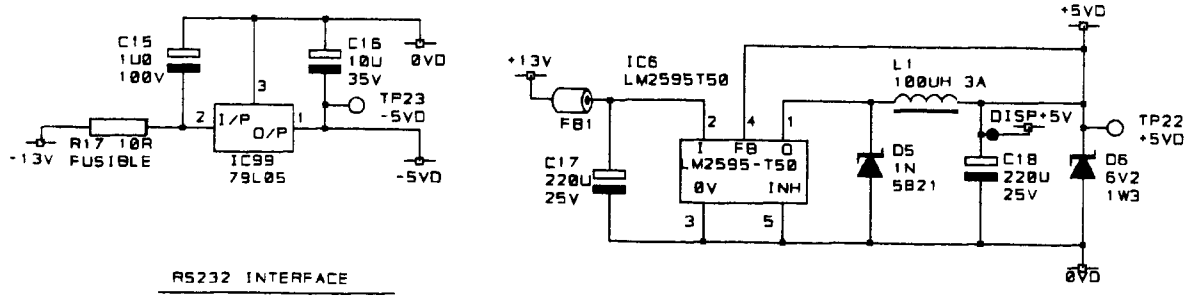

RS232 INTERFACE

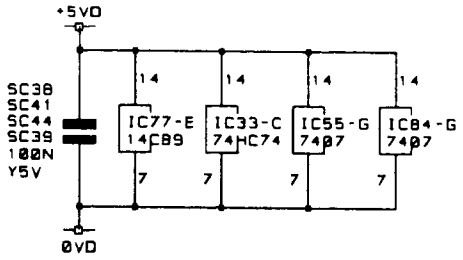

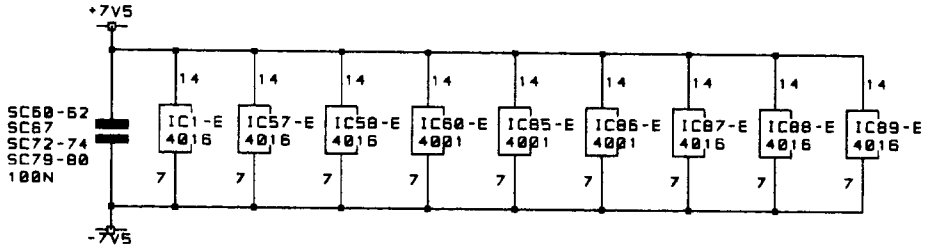

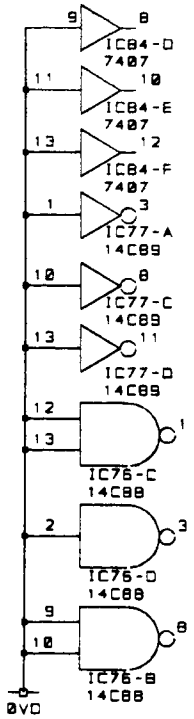

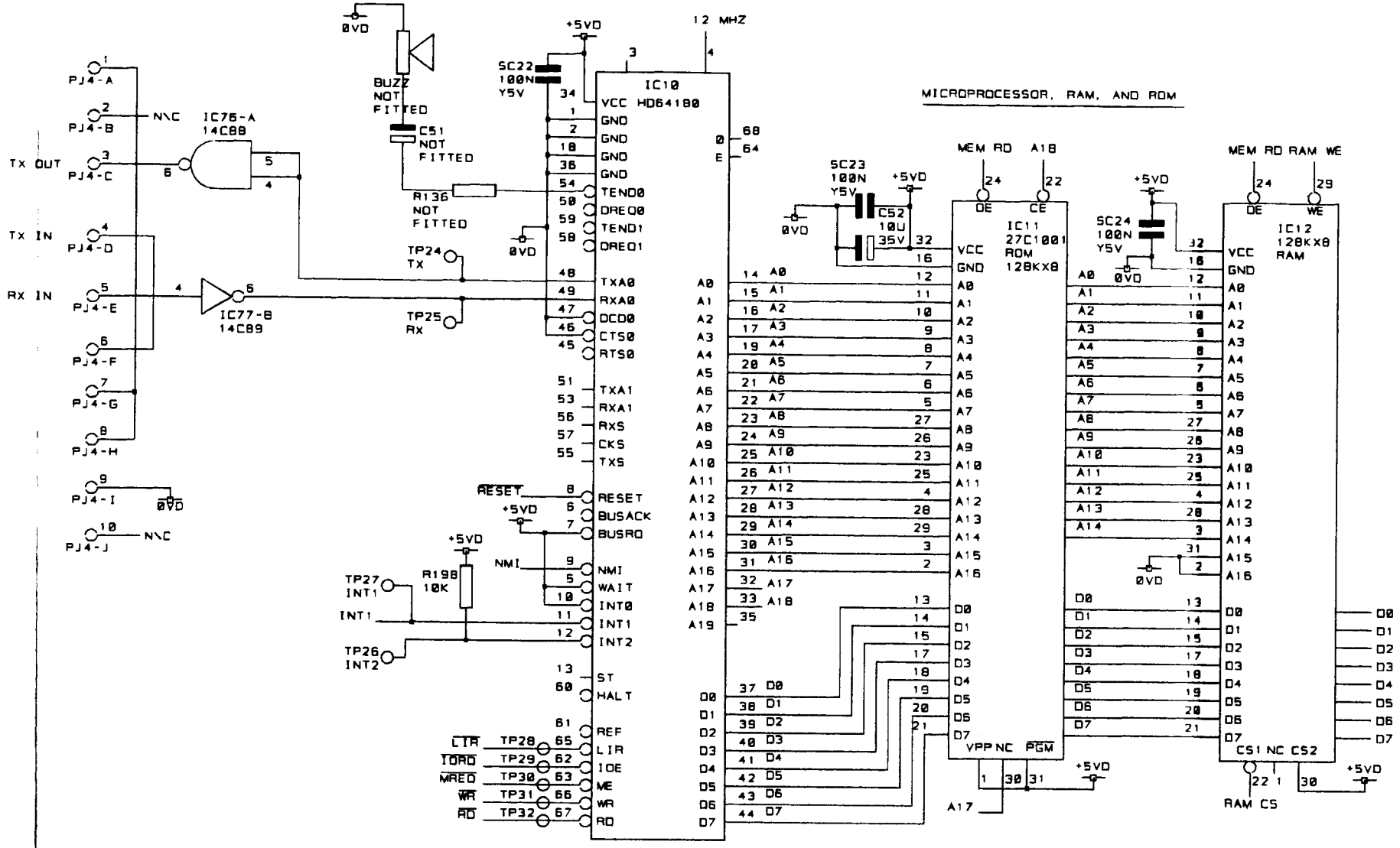

MICROPROCESSOR, RAM, AND ROM

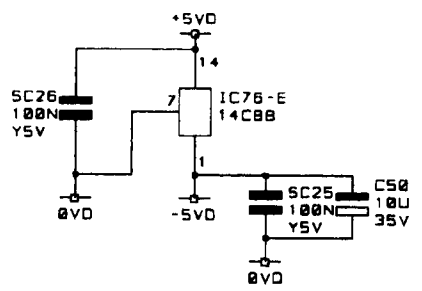

Main PCB Sheet 1 – Voltage Regulators, CPU, RS232

2

DIFF I/V AMPS SWITCHING AND BUFFERS

SIGNAL AMPLIFIERS

I/P PROTECTION (PART)

I/P PROTECTION (PART)

BAND-PASS FILTERS

I TO V CONVERTERS AND PRECISION RESISTORS

DIFFERENTIAL AMPLIFIER

PHASE SENSITIVE DETECTOR (PSD)

OVERLOAD COMPARATOR

PSD DRIVE

U070981.CSD

Main PCB Sheet 2 – Input Protection, Precision Resistors and V-I measurement, Differential and Switched Gain Amplifiers, Band Pass Filters, Overload Detector, Phase Sensitive Detector

2

SINEWAVE SYNTHESIZER

SWITCHED LOW PASS FILTERS

OUT DRIVE AMPLIFIER

Main PCB Sheet 3 – Sinewave Generator, Switched Low Pass Filters and DUT Drive Amplifier

2

IC102
XC95216

+5VD
0VD
RESET
PSD COMP
PHASE
START CONVERT
RAM WE
RAM CS
A4
A5
A6
A7
A18
D0
D1
D2
D3
D4
D5
D6
D7
TDO
MEM RD
INT1
NMI
TDRD
MWRED

A-
A+
B-
B+
EHRANGE
OVERLOAD
RLY A
IVA
IVB
AMP
FREQ A
FREQ B
BIAS
LEVEL
DAC_CS
EEPROM DO
EEPROM CS
EEPROM CK
EEPROM DI
SELECT 120
10FS-
10FS+
24 MHZ
6 MHZ
PJ8_3
PJ8_4
PJ8_5
PJ8_6

LTR
WR
RD
WATCHDOG STROBE
A3
PJ5_2
PJ5_3
PJ5_4
PJ5_5
PJ5_6
PJ5_7
PJ5_8
PJ5_9
PJ5_10
PJ5_11
PJ5_14
PJ5_15
PJ5_16
PJ5_17
PJ5_18
PJ5_19
PJ5_20
PJ5_21
PJ5_22
PJ5_23
PJ5_24
PJ5_25
PJ5_26

SC1-10
100N

R210-17 10K
PJ5_26 PJ5_25 PJ5_24 PJ5_23 PJ5_22 PJ5_21 PJ5_20 PJ5_19
PJ5-Z PJ5-Y PJ5-X PJ5-W PJ5-V PJ5-U PJ5-T PJ5-S

R218-22 22K
PJ5_18 PJ5_17 PJ5_16 PJ5_15 PJ5_14
PJ5-R PJ5-Q PJ5-P PJ5-O PJ5-N

DISP+5V
C22
10N
63V
PJ5-M
PJ5-L

PJ5_11 PJ5_10 PJ5_9 PJ5_8 PJ5_7 PJ5_6 PJ5_5 PJ5_4 PJ5_3 PJ5_2
PJ5-K PJ5-J PJ5-I PJ5-H PJ5-G PJ5-F PJ5-E PJ5-D PJ5-C PJ5-B
PJ5-A

R223-30 82R
PJ8_26 PJ8_25 PJ8_24 PJ8_23 PJ8_22 PJ8_21 PJ8_20 PJ8_19
PJ8-Z PJ8-Y PJ8-X PJ8-W PJ8-V PJ8-U PJ8-T PJ8-S

R231-38 82R
PJ8_18 PJ8_17 PJ8_16 PJ8_15 PJ8_14 PJ8_13 PJ8_12 PJ8_11
PJ8-R PJ8-Q PJ8-P PJ8-O PJ8-N PJ8-M PJ8-L PJ8-K

PJ8_10 PJ8_9 PJ8_8 PJ8_7 PJ8_6 PJ8_5 PJ8_4 PJ8_3
PJ8-J PJ8-I PJ8-H PJ8-G PJ8-F PJ8-E PJ8-D PJ8-C

PJ8_2 PJ8_1
PJ8-B PJ8-A

TO DISPLAY AND KEYBOARD PCB

U0709C1.CSD

CLOCK GENERATOR

SC27
100N
Y5V
OSC1
24MHZ
NC
VCC
VSS
OP
24 MHZ

12 MHZ
6 MHZ
TP52
IC33-A
74HC74
IC33-B
74HC74

WATCHDOG TIMER

IC7
DS1705
PBRST
VCC
GND
IN
WDS
RST
ST
NMI
R18
*
C19
10N
63V
R19
10K
LK1
IC55-F
7407
R199
10K
RESET
TP53 RST
RESET
WATCHDOG STROBE
TP54 WS
* NOT FITTED

EEPROM

SC21
100N
Y5V
TP58 EECS
EEPROM CS
TP55 EECLK
EEPROM CK
TP57 EEDO
EEPROM DO
TP56 EEDI
EEPROM DI
R239
22K
R240
22K
IC13
X25320
SELECT 120
LK2
LK FOR 120HZ

R241-45
R347-48 22K
PHASE
START CONVERT
FREQ A
FREQ B
EEPROM DI
EEPROM CS
EEPROM CK

JTAG CONNECTOR
PJ7-A PJ7-B PJ7-C PJ7-D PJ7-E PJ7-F PJ7-G PJ7-H PJ7-I
TCK
TDO
TDI
TMS
PJ7 8 PIN REMOVED

Main PCB Sheet 4 – FPGA, Watchdog Timer, EEPROM, Oscillator

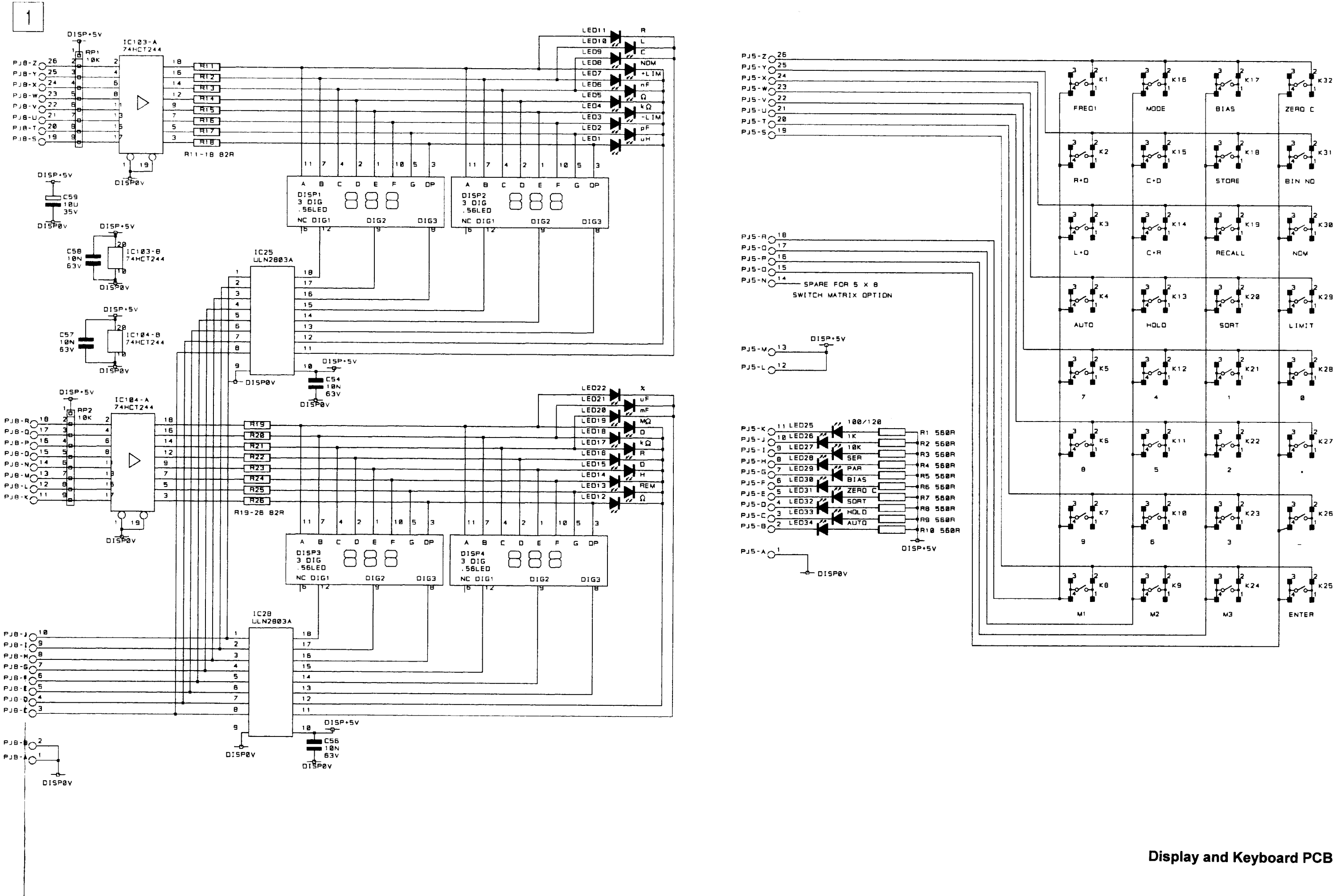

Display and Keyboard PCB



Thurlby Thandar Instruments Ltd
Glebe Road, Huntingdon, Cambridgeshire PE29 7DR, England
Telephone: (44) 01480 412451 Fax: (44) 01480 450409
e mail: sales@tti-test.com web site: www.tti-test.com