Product data sheet

Specifications



pressure switch XMLB 500 bar - adjustable scale 2 thresholds - 1 C/O

XMLB500D2C11

Main

Range of product	Telemecanique Pressure sensors XM
Product or component type	Electromechanical pressure sensor
Pressure sensor type	Electromechanical pressure sensor
Device short name	XMLB
Pressure rating	500 bar
Controlled fluid	Hydraulic oil (0…160 °C)
Fluid connection type	G 1/4 (female) conforming to ISO 228
Electrical connection	1 male connector EN 175301-803-A (ex DIN43650), 4 pins
Contacts type and composition	1 C/O
Product specific application	-
Pressure switch type of operation	Regulation between 2 thresholds
Electrical circuit type	Control circuit
Scale type	Adjustable differential
Local display	With
Adjustable range of switching point on rising pressure	30…500 bar
Adjustable range of switching point on falling pressure	7…447.4 bar
Possible differential maximum at high setting	300 bar
Maximum permissible accidental pressure	1125 bar
Destruction pressure	2250 bar
Pressure actuator	Piston
Materials in contact with fluid	FPM, FKM Stainless steel Brass PTFE Steel
Enclosure material	Zinc alloy
[In] rated current	3 A, B300, AC-15 (Ue = 120 V) conforming to EN/IEC 60947-5-1 1.5 A, B300, AC-15 (Ue = 240 V) conforming to EN/IEC 60947-5-1 0.1 A, R300, DC-13 (Ue = 250 V) conforming to EN/IEC 60947-5-1

Disclaimer: This documentation is not intended as a substitute for and is not to be used for determining suitability or reliability of these products for specific user applications

Complementary

Possible differential minimum at low setting	23 bar (- 2.6 bar, + 3.8 bar)
Possible differential minimum at high setting	52.6 bar (- 14.8 bar, + 11.2 bar)
Maximum permissible pressure - per cycle	625 bar
Terminal block type	4 terminals
Maximum operating rate	60 cyc/mn
Repeat accuracy	2 %
[Ui] rated insulation voltage	300 V conforming to UL 508 500 V conforming to EN/IEC 60947-1 300 V conforming to CSA C22.2 No 14
[Uimp] rated impulse withstand voltage	6 kV conforming to EN/IEC 60947-1
Auxiliary contacts operation	Snap action
Contacts material	Silver contacts
Maximum resistance across terminals	25 mOhm conforming to IEC 255-7 category 3 25 mOhm conforming to NF C 93-050 method A
Short-circuit protection	10 A cartridge fuse, type gG (gl)
Mechanical durability	3000000 cycles
Setting	External
Height	113 mm
Depth	75 mm
Width	35 mm
Net weight	0.78 kg

Environment

Standards	CE CSA C22.2 No 14 UL 508 EN/IEC 60947-5-1
Product certifications	LROS (Lloyds register of shipping) BV CCC EAC CSA UL
Protective treatment	TC standard version
Ambient air temperature for operation	-25…70 °C
Ambient air temperature for storage	-40…70 °C
Operating position	Any position
Vibration resistance	4 gn conforming to IEC 60068-2-6 (f = 30…500 Hz)
Shock resistance	50 gn conforming to IEC 60068-2-27
Electrical shock protection class	Class I conforming to IEC 1140 Class I conforming to IEC 536 Class I conforming to NF C 20-030
IP degree of protection	IP65 conforming to EN/IEC 60529

Packing Units

Unit Type of Package 1	PCE
Number of Units in Package 1	1
Package 1 Weight	809.0 g
Package 1 Height	4.2 cm
Package 1 width	11.5 cm
Package 1 Length	12.0 cm
Unit Type of Package 2	S02
Number of Units in Package 2	9
Package 2 Weight	7.476 kg
Package 2 Height	15.0 cm
Package 2 width	30.0 cm
Package 2 Length	40.0 cm

Offer Sustainability

Sustainable offer status	Green Premium product
REACh Regulation	REACh Declaration
EU RoHS Directive	Pro-active compliance (Product out of EU RoHS legal scope) EU RoHS Declaration
Mercury free	Yes
RoHS exemption information	Yes
Environmental Disclosure	Product Environmental Profile
California proposition 65	WARNING: This product can expose you to chemicals including: Diisononyl phthalate (DINP), which is known to the State of California to cause cancer, and Di-isodecyl phthalate (DIDP), which is known to the State of California to cause birth defects or other reproductive harm. For more information go to www.P65Warnings.ca.gov

Contractual warranty

Warranty	18 months

Product data sheet XMLB500D2C11

Dimensions Drawings

Dimensions

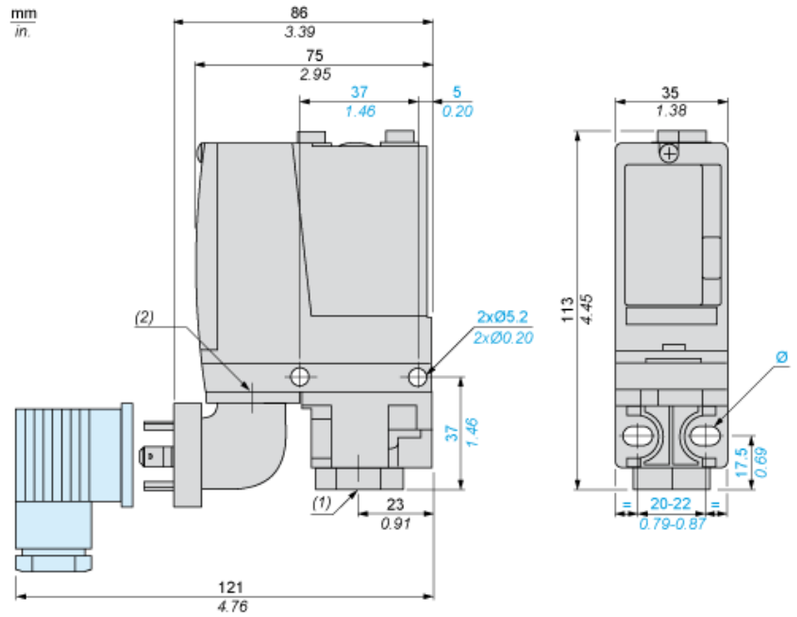

(1) 1 fluid entry, tapped G1/4 (BSP female)
(2) EN 175301-803-A connector
Ø : 2 elongated holes Ø 5.2 x 6.7

Wiring Diagram

Terminal Model

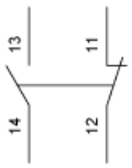

Wiring Diagram

Vacuum Switch Connector Pin View

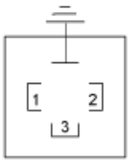

(1) 11 and 13
(2) 12
(3) 14

Operating Curves

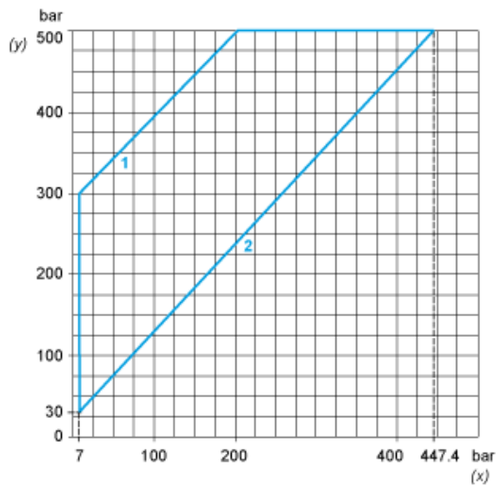

(y) Rising pressure
(x) Falling pressure
1 : Maximum differential
2 : Minimum differential

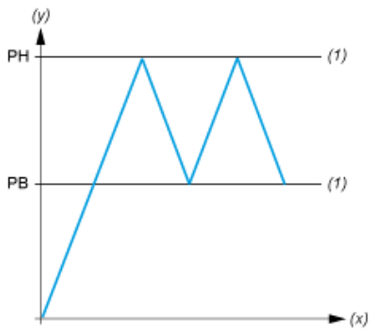

(y) Pressure
(x) Time
(1) Adjustable value
PH : High point
PB : Below point