

Model Number

V95-W-2M-PVC

Female cordset, 7/8", 5-pin, PVC cable

Features

- Self-locking threaded joint

Dimensions

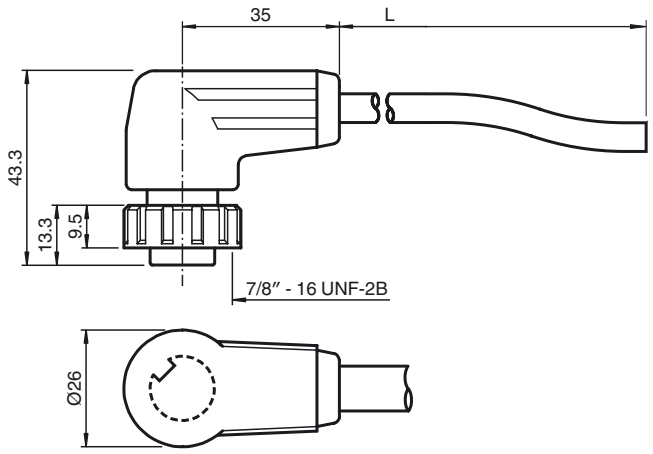

Technical data

General specifications		
Number of pins		5
Electrical specifications		
Operating voltage	U_B	max. 250 V AC/DC
Operating current	I_B	max. 9 A
Volume resistance		< 5 mΩ
Ambient conditions		
Ambient temperature		5 ... 90 °C (41 ... 194 °F) active -40 ... 90 °C (-40 ... 194 °F) fixed
Pollution Degree		3
Mechanical specifications		
Degree of protection		IP68 (2 hrs at 10 bar)
Material		
Contacts		CuZn, silver-plated
Contact surface		Au
Body		TPU, orange
Cable		PVC
Slotted nut		PA
Cable		
Sheath diameter		Ø 6.8 mm
Bending radius		> 5 x cable diameter, fixed > 10 x cable diameter, moving
Color		orange
Cores		5 x 0.5 mm^2
Conductor construction		16 x 0.2 mm Ø
Length	L	2 m

Electrical connection

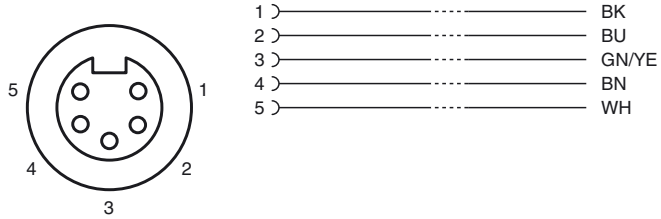

Release date: 2015-06-24 12:01 Date of issue: 2015-06-24 132894_eng.xml