E10447

Wirable socket

SDOAM120MSSFKPG

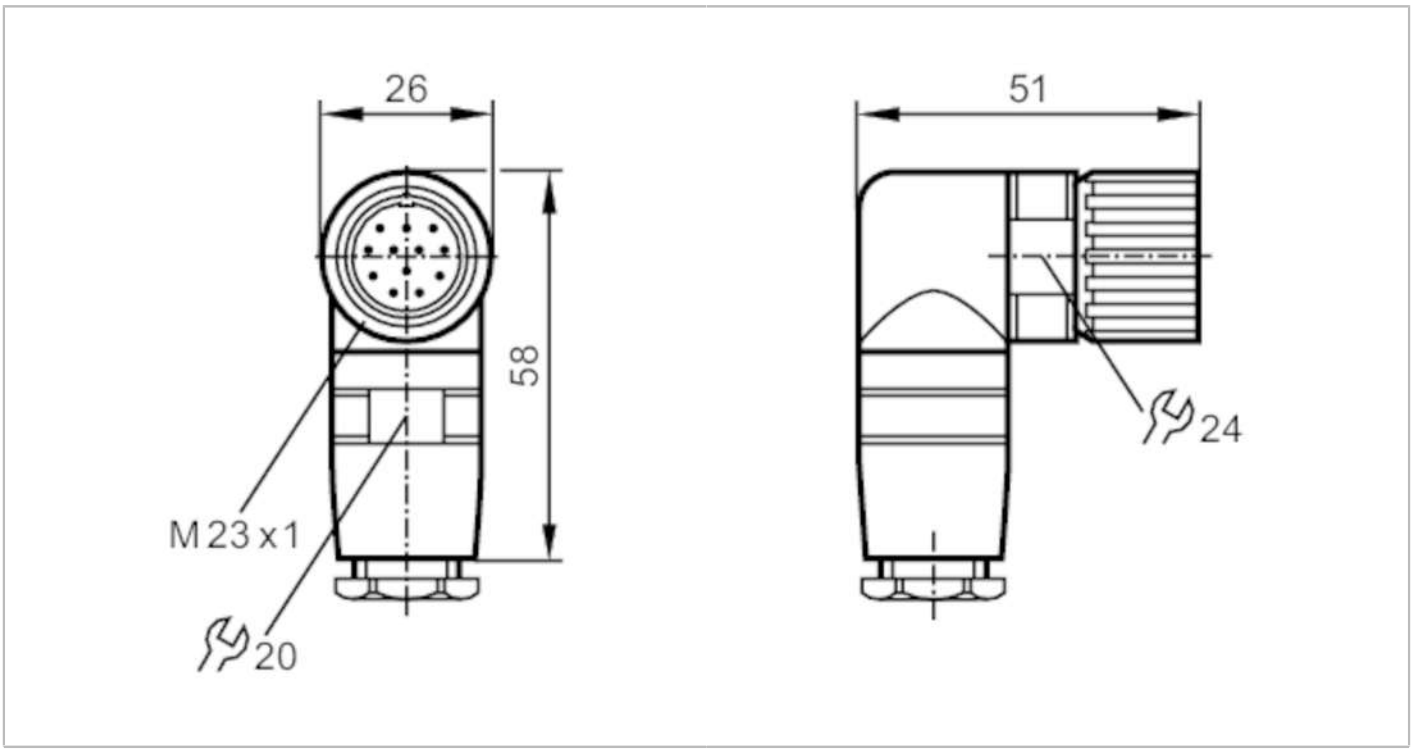

Electrical data		
Operating voltage	[V]	10...30 DC
Max. current load total	[A]	7.5
Operating conditions		
Ambient temperature	[°C]	-25...90
Protection		IP 65
Mechanical data		
Weight	[g]	144.5
Dimensions	[mm]	51 x 26 x 58
Materials		brass nickel-plated
Moulded-body material		brass, nickel-plated
Material nut		brass, nickel-plated
Remarks		
Pack quantity		1 pcs.

Electrical connection

soldering: ...1 mm²; Cable sheath: Ø 10...14 mm

Electrical connection - socket

Connector: 1 x M23, angled; Moulded body: brass, nickel-plated; Locking: brass, nickel-plated

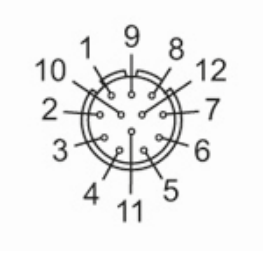

E10447

Wirable socket

SDOAM120MSSFKPG

Connection

