E10217

Connecting cable with socket

ADOAG030--S0002E03

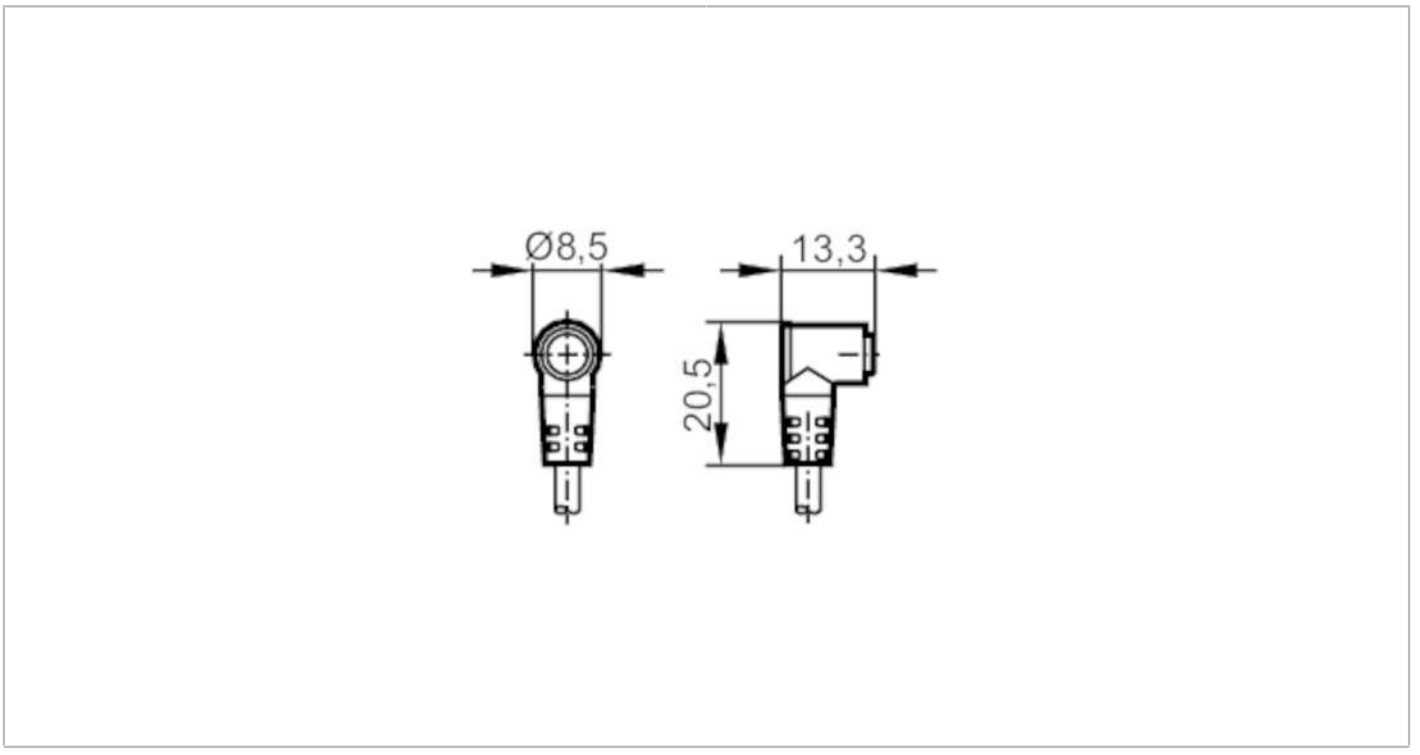

Electrical data		
Operating voltage	[V]	< 60 AC/DC
Operating conditions		
Ambient temperature	[°C]	-25...85
Protection		IP 65
Mechanical data		
Weight	[g]	33
Dimensions	[mm]	13.3 x 8.5 x 20.5
Materials		PUR
Moulded-body material		PUR
Remarks		
Pack quantity		1 pcs.
Electrical connection		

Cable: 2 m, PVC, black, Ø 3 mm; 3 x 0.14 mm² (18 x Ø 0.1 mm)

Electrical connection - socket

Connector: 1 x M8, angled; coding: A; Moulded body: PUR

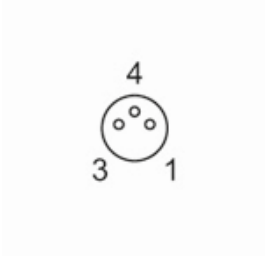

E10217

Connecting cable with socket

ADOAG030--S0002E03

Connection

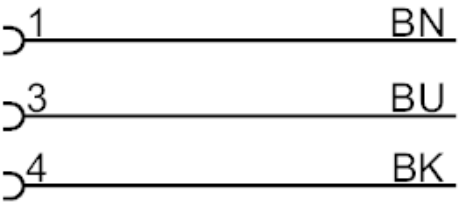

	Core colours :
BN =	brown
BK =	black
BU =	blue