THE INFORMATION CONTAINED IN THIS DRAWING IS THE SOLE PROPERTY OF L-COM, INC. ANY REPRODUCTIONS IN PART OR WHOLE WITHOUT THE WRITTEN PERMISSION OF L-COM, INC. IS PROHIBITED.

REVISIONS			
REV	DESCRIPTION	DATE	CHANGED BY
H	ECN 11659 ADD NOTE STATING - MAXIMUM SUGGESTED TORQUE VALUE 1N.M	02/15/2022	GUTTADAURO
J	ECN 12067: REVISED NOTES, REVISED NOTE 3 (TORQUE), REVISED FORMAT	09/02/2022	GUTTADAURO

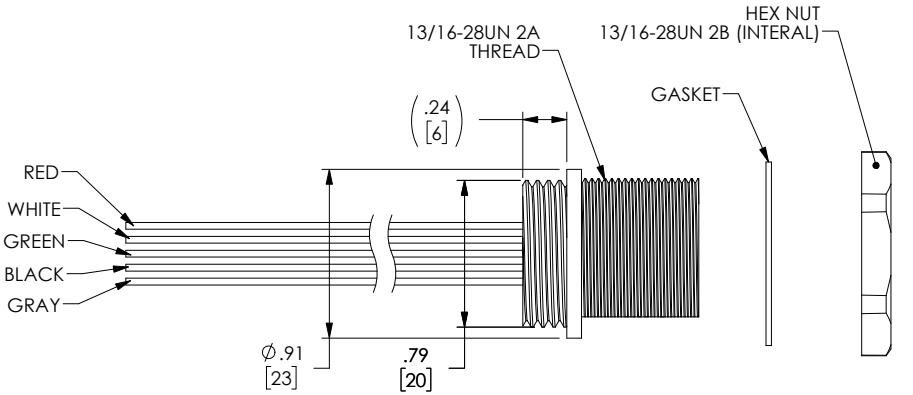

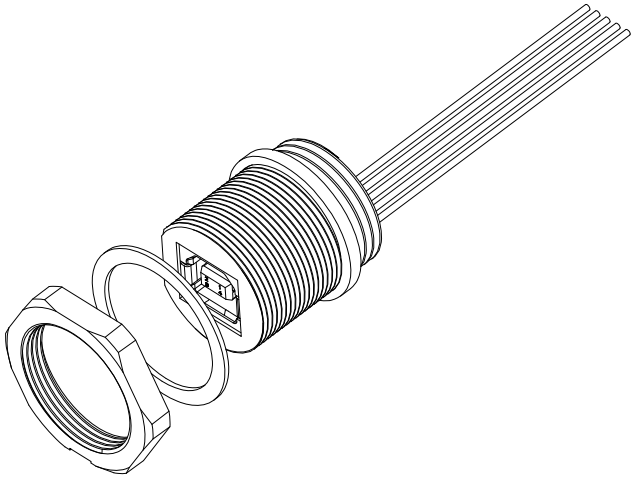

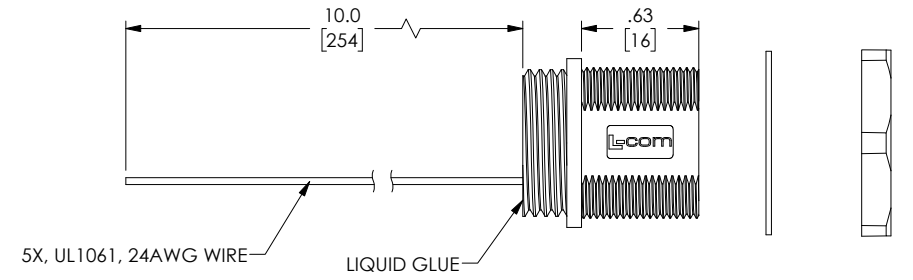

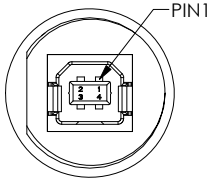

"J1"
USB SERIES "B"
WATERPROOF
JACK

WIRING MAP	
PIN#	COLOR
1	RED (PT 1945C)
2	WHITE (RAL 9003)
3	GREEN (PT 328C)
4	BLACK (PT BLACK 6C)
SHELL	GRAY (PT 421C)

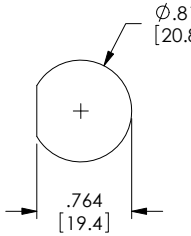

RECOMMENDED
PANEL OPENING

NOTES:

1. COMPONENT ASSEMBLY SHALL BE TESTED FOR CONTINUITY.
2. INGRESS PROTECTION RATING IS IP67 (J1 ONLY ,MATED)
3. (H) SUGGESTED MAX. TORQUE VALUE FOR HEX NUT IS 1.0N-m (8.8 lbf-in)
4. COMPONENT ASSEMBLY SHALL BE INDIVIDUALLY PACKAGED IN ACCORDANCE WITH L-COM SPECIFICATION PS-0031.

REGULATORY COMPLIANCE:
EU RoHS DIRECTIVE (MOST RECENT RELEASED VERSION)

UNLESS OTHERWISE SPECIFIED, DIMENSIONS ARE IN INCHES [mm]
OVERALL CABLE LENGTH TOLERANCE:
≤12 [305] = +1 [25] / -0
>12 [305] ≤60 [1524] = +2 [51] / -0
>60 [1524] ≤120 [3048] = +4 [102] / -0
>120 [3048] ≤300 [7620] = +6 [152] / -0
>300 [7620] = +5% / -0
ALL OTHER DIMENSIONAL TOLERANCES:
.X = ± .2 [5]
.XX = ± .02 [.5]
.XXX = ± .005 [.13]
FRACTIONS ± 1/32
ANGLES ± 1°
THIRD-ANGLE PROJECTION

APPROVALS	DATE
DRAWN BY C.MCCORMICK	10/31/2005
CHECKED BY D.FARHAM	10/31/2005
APPROVED BY R.CARRICK	10/31/2005

CONFIGURATION DETAILS OF UNDIMENSIONED FEATURES MAY VARY

COLOR VARIATIONS MAY OCCUR

L-com an INFINITE brand
50 High Street, West Mill,
North Andover, MA 01845 USA.
Phone: 1.800.341.5266
1.978.682.6936

CATEGORY: USB

PRODUCT DESCRIPTION: USB WATERPROOF SERIES B BULKHEAD TO BLUNT END

SIZE	CAGE CODE	ITEM NO.	REV.
B	43321	WPUSBBF	J

SCALE: NONE | CAD FILE: WPUSBBF.SLDDRW | SHEET 1 OF 1

T-Rev.D