REFRIGERATION CONTROLLERS

PJ32 easy REFRIGERATION CONTROLLER



- NTC Thermistor input
- 12Vac, 110Vac or 230Vac power supply
- Up to 3 relay outputs
- Built in alarm buzzer and real time clock
- Front panel mounting system with IP65 rating
- Serial connection
- Fast set up using preset configuration or programme key

These controllers are designed specifically for the management of refrigerated units, display cases and chilled showcases. Versions are available with 1, 2 and 3 relay outputs and come with preset configurations for the following applications:

PJEZS 1 relay output for use on static refrigeration units (i.e. with no evaporator fan) and a single NTC sensor input.

PJEZY 2 relay outputs for use on static units with active defrost by heater and control and defrost NTC sensor inputs

PJEZC 3 relay outputs for use on ventilated units (i.e compressor, fan and defrost control). 2 NTC input probes and a digital input/optional 3rd NTC probe.

SPECIFICATION

Supply voltage :	12Vac, 110Vac or 230Vac 50/60Hz
Power drain :	1.5VA
Sensor options :	NTC 10K@25ºC
Scale range :	-10 to +50ºC
Accuracy :	NTC +/-1ºC.
Ouputs :	OP1 : 2HP SPDT relay (8A and 16A available)
	OP2 : 8A SPST relay
	OP3 : 8A SPST relay
Ambient range:	-10 to 50°C <90% rH non-condensing
Weight:	120gms

CONNECTION DIAGRAMS

PJEZS

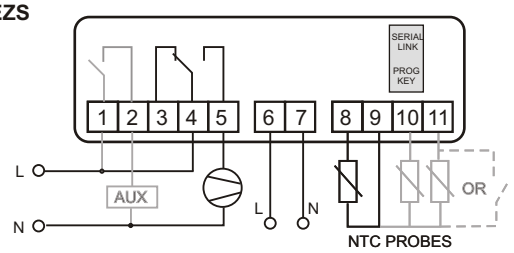

PJEZC

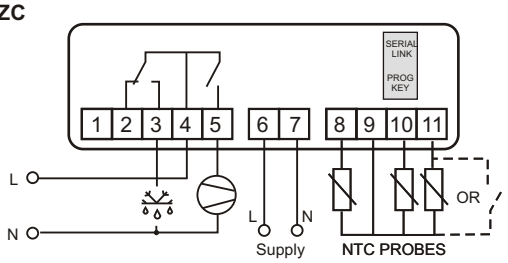

PJEZX

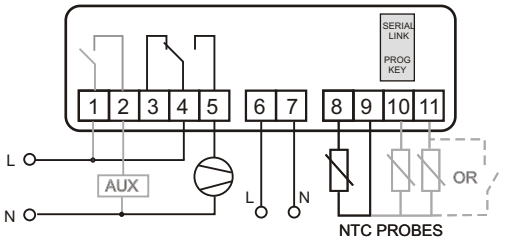

PJEZY

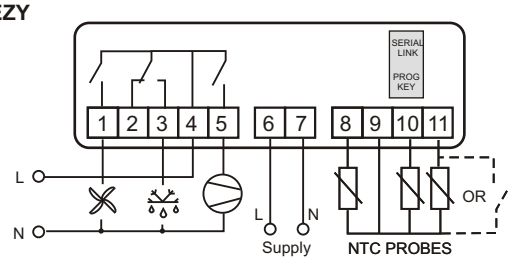

DIMENSIONS

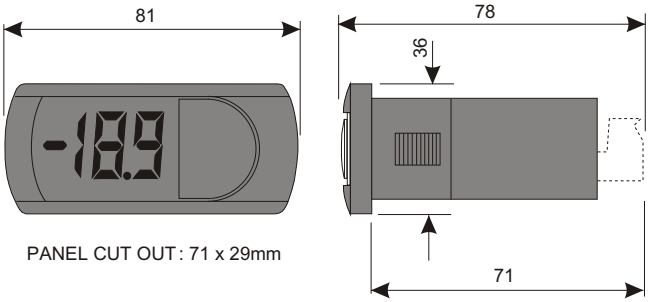

PANEL CUT OUT : 71 x 29mm

STANDARD ITEMS

Model	Supply	NTC Inputs			Outputs				Features		
		Control	defrost	Probe3/DI	Comp	defrost	Fan	Aux	Clock	Serial OP	Buzzer
PJEZS002E0	12Vac	x	-	-	8A	-	-	-	-	-	x
PJEZY002E0	12Vac	x	-	-	8A	8A	-	-	-	-	x
PJEZS00100	110Vac	x	x	x	8A	-	-	-	-	x	x
PJEZS0P1E0	110Vac	x	-	-	16A	-	-	-	-	-	x
PJEZS0P100	110Vac	x	x	x	16A	-	-	-	-	x	x
PJEZS0G100	110Vac	x	x	x	2HP	-	-	8A	-	x	x
PJEZC00100	110Vac	x	x	x	8A	8A	8A	-	-	x	x
PJEZM0N010	230Vac	x	x	x	-	-	-	-	-	x	x
PJEZS000E0	230Vac	x	-	-	8A	-	-	-	-	-	x
PJEZS00000	230Vac	x	x	x	8A	-	-	-	-	x	x
PJEZS0P0E0	230Vac	x	-	-	16A	-	-	-	-	-	x
PJEZS0P000	230Vac	x	x	x	16A	-	-	-	-	x	x
PJEZS0A000	230Vac	x	x	x	8A	-	-	8A	-	x	x
PJEZS0H000	230Vac	x	x	x	2HP	-	-	-	-	x	x
PJEZS0G000	230Vac	x	x	x	2HP	-	-	8A	-	x	x
PJEZX00000	230Vac	x	x	x	8A	8A	-	-	-	x	x
PJEZY00000	230Vac	x	x	x	8A	8A	-	-	-	x	x
PJEZY0H000	230Vac	x	x	x	2HP	8A	-	-	-	x	x
PJEZC00000	230Vac	x	x	x	8A	8A	8A	-	-	x	x
PJEZC0P000	230Vac	x	x	x	16A	8A	8A	-	-	x	x
PJEZC0M000	230Vac	x	x	x	2HP	8A	8A	-	x	x	x

Tempatron Ltd, Darwin Close, Reading, Berks, RG2 0TB, UK Tel : 0118 931 4062 Fax : 0118 931 0175 e-mail : sales@tempatron.co.uk