20835-899 PMC MEZZANINE FRONT PANEL, NON-SHIELDED, AL, ANODIZED

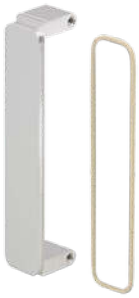

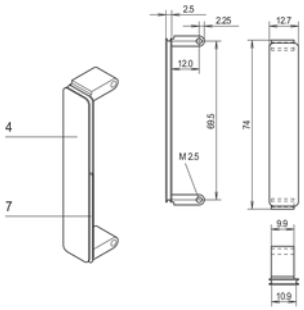

KEY FEATURES

Mezzanine front panel is fitted into PMC front panel cut-outs

EMC shielding with conductive O-ring

PRODUCT ATTRIBUTES

Type: Mezzanine Front Panel

Accessory Type: Front panel

Mounting: Snapped in

EMC Shielding: No (Retrofittable)

EMC Gasket Type: O-ring

Material: Aluminum

Front Finish: Anodized

Rear Finish: Conductive

Treated Edges: Yes

Height: 74 mm

Width: 12.7 mm

Complies With: PMC Mezzanine, IEEE P1386

Depth: 2.5 mm

Package Quantity: 10

ADDITIONAL PRODUCT DETAILS

Mezzanine front panel is fitted into PMC front panel cut-outs. Available in different treatments.

CERTIFICATIONS



North America
All locations
+1.763.422.2661
Chat with us:
schroff.nvent.com

Europe
Straubenhardt, Germany
+49.7082.794.0
Betschdorf, France
+33.3.88.90.64.90
Warsaw, Poland
+48.22.209.98.35
Assago, Italy
+39.02.932.7141
Chat with us:
schroff.nvent.com

Asia
Shanghai, China
+86.21.2412.6943
Qingdao, China
+86.532.8771.6101
Singapore
+65.6768.5800
Shin-Yokohama, Japan
+81.45.476.0271
Chat with us:
schroff.nvent.com

Middle East & India
Dubai, United Arab Emirates
+971.4.378.1700
Bangalore, India
+91.80.6715.2001
Istanbul, Turkey
+90.216.250.7374
Chat with us:
schroff.nvent.com

nVent

Our powerful portfolio of brands:
nVent.com CADDY ERICO HOFFMAN RAYCHEM SCHROFF TRACER

© 2023 nVent. All nVent marks and logos are owned or licensed by nVent Services GmbH or its affiliates. All other trademarks are the property of their respective owners.

nVent reserves the right to change specifications without notice.