S18 Sensors – ac-Voltage Series

Self-contained, ac-operated sensors

Installation Guide

more sensors, more solutions

Additional information on this product is immediately available online at **www.bannerengineering.com/116160**

View or download additional information, including excess gain curves, beam patterns and accessories.
For further assistance, contact a Banner Engineering Applications Engineer at (763) 544-3164 or (888) 373-6767.

EZ BEAM



Sensing Mode		Range	LED	Output	Model*
	Opposed	20 m (66')	Infrared 950 nm	–	S183E
				LO	S18AW3R
				DO	S18RW3R
	Retro-reflective†	2 m (79")		LO	S18AW3L
				DO	S18RW3L
P	Polarized Retro-reflective†		Visible Red 680 nm	LO	S18AW3LP
				DO	S18RW3LP
	Diffuse	100 mm (4")	Infrared 880 nm	LO	S18AW3D
				DO	S18RW3D
		300 mm (12")		LO	S18AW3DL
				DO	S18RW3DL
	Fixed Field	25 mm (1") cutoff		LO	S18AW3FF25
				DO	S18RW3FF25
		50 mm (2") cutoff		LO	S18AW3FF50
				DO	S18RW3FF50
		100 mm (4") cutoff		LO	S18AW3FF100
				DO	S18RW3FF100

* Standard 2 m (6.5') cable models are listed.
- **9 m (30') cable:** add suffix **"W/30"** (e.g., **S183E W/30**).
- **4-pin Micro-style QD models:** add suffix **"Q1"** (e.g., **S183EQ1**). A model with a QD connector requires a mating cable.

† Use polarized models when shiny objects will be sensed.

Cabled Emitters



QD Emitters (4-pin Micro-Style)

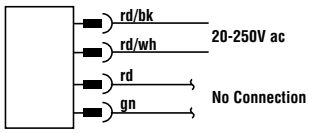

All Other Cabled Models

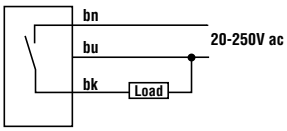

All Other QD Models (4-pin Micro-Style)

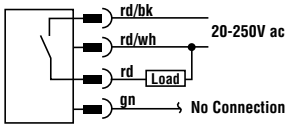

Dimensions

Cabled Models

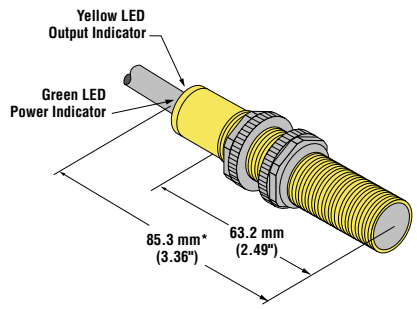

*Polarized retro and fixed-field models = 86.3 mm (3.40")

QD Models

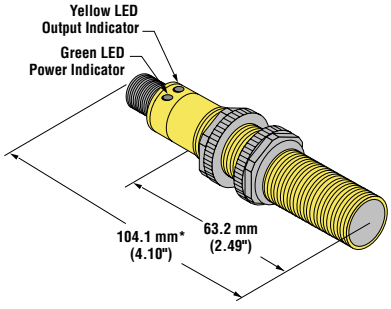

*Polarized retro and fixed-field models = 105.1 mm (4.14")

WARNING . . . Not To Be Used for Personnel Protection

Never use these products as sensing devices for personnel protection. Doing so could lead to serious injury or death. These sensors do NOT include the self-checking redundant circuitry necessary to allow their use in personnel safety applications. A sensor failure or malfunction can cause either an energized or de-energized sensor output condition. Consult your current Banner Safety Products catalog for safety products which meet OSHA, ANSI and IEC standards for personnel protection.

EZ BEAM S18 Sensors – ac-Voltage Series

Specifications

Supply Voltage and Current
20 to 250V ac (50/60 Hz). Average current: 20 mA
Peak current: 200 mA at 20V ac, 500 mA at 120V ac, 750 mA at 250V ac

Supply Protection Circuitry
Protected against transient voltages

Output Configuration
SPST solid-state ac switch; Three-wire hookup; Choose light operate or dark operate models
Light Operate: Output conducts when sensor sees its own (or the emitter's) modulated light
Dark Operate: Output conducts when the sensor sees dark

Output Rating
300 mA maximum (continuous);
Fixed-Field Models: derate 5 mA/°C above +50°C (+122°F)
Inrush Capability 1 amp for 20 milliseconds, non-repetitive
OFF-state leakage current: < 100 microamps
ON-state saturation voltage: 3V at 300 mA ac; 2V at 15 mA ac

Output Protection Circuitry
Protected against false pulse on power-up

Output Response Time
Opposed Mode: 16 milliseconds ON, 8 milliseconds OFF
Other Models: 16 milliseconds ON and OFF
NOTE: 100 millisecond delay on power-up

Repeatability
Opposed Mode: 2 milliseconds
Other Models: 4 milliseconds
Repeatability and response are independent of signal strength.

Indicators
Two LEDs (Green and Yellow)
Green ON steady: power to sensor is ON
Yellow ON steady: sensor sees light
Yellow flashing: excess gain marginal (1 to 1.5x) in light condition

Construction
PBT polyester housing; polycarbonate (opposed mode) or acrylic lens

Environmental Rating
Leakproof design rated NEMA 6P, DIN 40050 (IP69K)

Connections
2 m (6.5') attached cable, or 4-pin Micro-style quick-disconnect fitting

Operating Conditions
Temperature: -40° to +70°C (-40° to +158°F);
Maximum relative humidity: 90% at 50°C (non-condensing)

Vibration and Mechanical Shock
All models meet Mil. Std. 202F requirements. Method 201A (Vibration; frequency 10 to 60 Hz, max., double amplitude 0.06" acceleration 10G). Method 213B conditions H&I (Shock: 75G with unit operating; 100G for non-operation)

Certifications

Quick-Disconnect (QD) Cables

Style	Model	Length	Dimensions	Pin-Out
4-pin Micro-style Straight	**MQAC-406** **MQAC-415** **MQAC-430**	2 m (6.5') 5 m (15') 9 m (30')	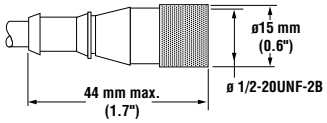	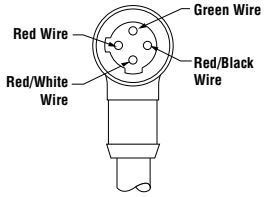
4-pin Micro-style Right-angle	**MQAC-406RA** **MQAC-415RA** **MQAC-430RA**	2 m (6.5') 5 m (15') 9 m (30')	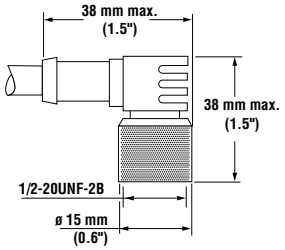	

Additional information on this product is immediately available online at **www.bannerengineering.com/116160**

View or download additional information, including excess gain curves, beam patterns and accessories.
For further assistance, contact a Banner Engineering Applications Engineer at (763) 544-3164 or (888) 373-6767.

Banner Engineering Corp Limited Warranty
Banner Engineering Corp. warrants its products to be free from defects in material and workmanship for one year following the date of shipment. Banner Engineering Corp. will repair or replace, free of charge, any product of its manufacture which, at the time it is returned to the factory, is found to have been defective during the warranty period. This warranty does not cover damage or liability for misuse, abuse, or the improper application or installation of the Banner product.
THIS LIMITED WARRANTY IS EXCLUSIVE AND IN LIEU OF ALL OTHER WARRANTIES WHETHER EXPRESS OR IMPLIED (INCLUDING, WITHOUT LIMITATION, ANY WARRANTY OF MERCHANTABILITY OR FITNESS FOR A PARTICULAR PURPOSE), AND WHETHER ARISING UNDER COURSE OF PERFORMANCE, COURSE OF DEALING OR TRADE USAGE.
This Warranty is exclusive and limited to repair or, at the discretion of Banner Engineering Corp., replacement. IN NO EVENT SHALL BANNER ENGINEERING CORP. BE LIABLE TO BUYER OR ANY OTHER PERSON OR ENTITY FOR ANY EXTRA COSTS, EXPENSES, LOSSES, LOSS OF PROFITS, OR ANY INCIDENTAL, CONSEQUENTIAL OR SPECIAL DAMAGES RESULTING FROM ANY PRODUCT DEFECT OR FROM THE USE OR INABILITY TO USE THE PRODUCT, WHETHER ARISING IN CONTRACT OR WARRANTY, STATUTE, TORT, STRICT LIABILITY, NEGLIGENCE, OR OTHERWISE.
Banner Engineering Corp. reserves the right to change, modify or improve the design of the product without assuming any obligations or liabilities relating to any product previously manufactured by Banner Engineering Corp.