GLC0400C1

Three-pole changeover switch, IEC/EN, 400A



Product designation			Changeover Switch
Product type designation			GLC
Number of poles		Nr.	3
Operating voltage type			AC
Contact characteristics			
IEC Conventional free air thermal current Ith		A	400
Rated insulation voltage Ui IEC/EN		V	1000
Rated impulse withstand voltage Uimp		kV	12
Operating current Ie			
AC31B			
	400V	A	400
	500V	A	400
	690V	A	400
AC32B			
	400V	A	400
	500V	A	400
	690V	A	400
AC33B			
	400V	A	400
	500V	A	400
	690V	A	400
Power dissipation per pole max		W	26.0
Rated operational power AC23A			
	400V	kW	200
	690V	kW	400
Rated short time current (1s) Icw (rms)		kA	12.5
Rated short time current (0.3s) Icw (rms)		kA	20
Conditional short-circuit current (rms)		kA	80
Short-circuit protection with fuse		Class/A	gG/400
Making capacity AC23A 400V		A	4000
Breaking capacity AC23A 400V		A	3200
Mechanical life		cycles	10000
Mechanical features			
Operating position			
	normal		Vertical plan
	allowable		Any
Fixing			Screw
Terminals			
	type		M10 x 25
Tightening torque for terminals			
	min	Nm	30
	max	Nm	37
	min	lbin	265
	max	lbin	327

The characteristics described in this document are subject to updates or modifications at any time. The descriptions, technical and functional information, illustrations and instructions in this brochure are purely illustrative, and are consequently not contractually binding

Conductor section

	IEC min	mm²	1X182
	IEC max	mm²	2X185
	AWG/kcmil min		1X400
	AWG/kcmil max		2X350

Ambient conditions

Operating temperature

	min	°C	-25
	max	°C	+55

Storage temperature

	min	°C	-40
	max	°C	+70

Max altitude	m	3000

Dimensions

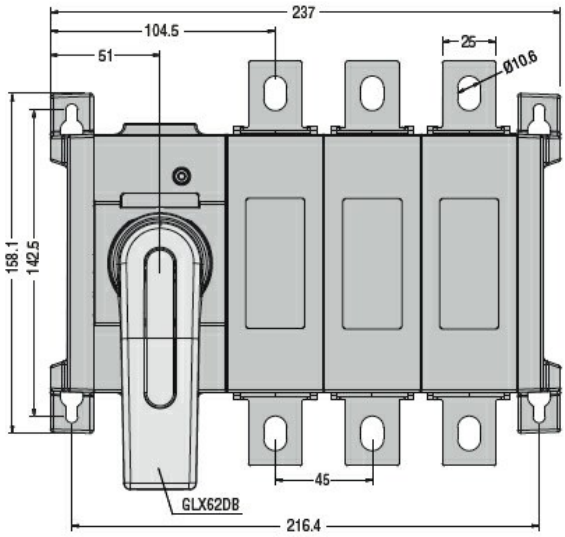

Wiring diagrams

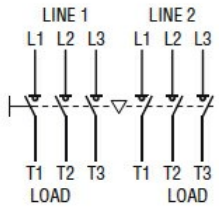

Certifications and compliance

Compliance

IEC/EN 60947-1
IEC/EN 60947-3
IEC/EN 60947-6-1

ETIM classification

ETIM 8.0	EC000216 - Switch disconnector

The characteristics described in this document are subject to updates or modifications at any time. The descriptions, technical and functional information, illustrations and instructions in this brochure are purely illustrative, and are consequently not contractually binding