ControlMaster CM30 and CM50

Universal process controllers, ¼ and ½ DIN



Measurement made easy

For more information

Further publications for the ControlMaster CM30 and CM 50 controllers are available for free download from:

www.abb.com/measurement

or by scanning these codes:

CM30

CM50

To access the IAMA help & support portal please scan the following code:

	Search for or click on:
Data sheet ControlMaster CM30 | Universal process controller, ¼ DIN	DS/CM30-EN
Data sheet ControlMaster CM50 | Universal process controller, ½ DIN	DS/CM50-EN
User guide (basic functionality) ControlMaster CM10, CM30 and CM50 | Universal process controllers, ⅛, ¼ and ½ DIN	IM/CM/B-EN
User guide (standard functionality) ControlMaster CM10, CM30 and CM50 | Universal process controllers, ⅛, ¼ and ½ DIN	IM/CM/S-EN
User guide (extended/dual functionality) ControlMaster CM30, CM50 and CMF310 | Universal process controllers, ¼, ½ DIN and fieldmount	IM/CM/ED-EN
Communications supplement ControlMaster CM10, CM15, CM30, CM50, CMF160 and CMF310 Universal process controllers and indicator, ⅛, ¼, ½ DIN and fieldmount	IM/CM/C-EN

Contents

1 Health & Safety 4
Document symbols 4
Safety precautions 4
Potential safety hazards 5
Electrical 5
Safety standards 5
EC Directive 89/336/EEC 5
End-of-life disposal 5
Cleaning 6
Symbols 6
Restriction of Hazardous Substances (RoHS) 7

2 Specification 8

3 Installation 10
Siting 11
Mounting 12

4 Electrical connections 15
Accessing the connection terminals 16
CM30 electrical connections 17
CM50 electrical connections 18
Standard analog inputs (1 and 2) 19

5 Front panel keys 20

6 Operator level menus 21
Profile operator page 22

7 Access levels and security options 23
Security options 23

8 Diagnostics messages 24

9 Instrument menus 30

1 Health & Safety

Document symbols

Symbols that appear in this document are explained below:

⚠ WARNING

The signal word 'WARNING' indicates an imminent danger. Failure to observe this information may result in death or severe injury.

NOTICE

The signal word 'NOTICE' indicates potential material damage.

Note.
'Note' indicates useful or important information about the product.

Safety precautions

Be sure to read, understand and follow the instructions contained within this manual before and during use of the equipment. Failure to do so could result in bodily harm or damage to the equipment.

⚠ WARNING

Installation and maintenance of this product must only be conducted by personnel authorized to work on electrical installations and in accordance with relevant local regulations.

Potential safety hazards
Electrical

⚠ WARNING

To ensure safe use when operating this equipment, the following points must be observed:

- Up to 240 V AC may be present. Be sure to isolate the supply before removing the terminal cover.
- Normal safety precautions must be taken to avoid the possibility of an accident occurring when operating in conditions of high pressure and/or temperature.

Safety advice concerning the use of the equipment described in this manual or any relevant Material Safety Data Sheets (where applicable) can be obtained from the Company, together with servicing and spares information.

Safety standards

This product has been designed to satisfy the requirements of IEC61010-1:2010 3rd edition 'Safety Requirements for Electrical Equipment for Measurement, Control and Laboratory Use' and complies with US NEC 500, NIST and OSHA.

EC Directive 89/336/EEC

Electrical – In order to meet the requirements of the EC Directive 89/336/EEC for EMC regulations, this product must be used in an industrial environment.

End-of-life disposal

The controller contains a small lithium battery that must be removed and disposed of responsibly in accordance with local environmental regulations.

The remainder of the controller does not contain any substance that causes undue harm to the environment and must be disposed of in accordance with the Directive on Waste Electrical and Electronic Equipment (WEEE). It must not be disposed of in Municipal Waste Collection.

...1 Health & Safety

...End-of-life disposal

ABB is committed to ensuring that the risk of any environmental damage or pollution caused by any of its products is minimized as far as possible. The European Waste Electrical and Electronic Equipment (WEEE) Directive that initially came into force on 13 August 2005 aims to reduce the waste arising from electrical and electronic equipment; and improve the environmental performance of all those involved in the life cycle of electrical and electronic equipment.

In conformity with European local and national regulations, electrical equipment marked with the above symbol may not be disposed of in European public disposal systems after 12th August 2005.

Cleaning

The controller can be hosed down if it has been installed to IP66/NEMA 4X standards. Warm water and a mild detergent can be used.

Symbols

Symbols that appear on this product are shown below:

Protective earth (ground) terminal.

Both direct and alternating current supply.

This symbol, when noted on a product, indicates a potential hazard that could cause serious personal injury and/or death. The user must refer to this commissioning instruction for operation and/or safety information.

This symbol, when noted on a product enclosure or barrier, indicates that a risk of electrical shock and/or electrocution exists. Only individuals qualified to work with hazardous voltages should open the enclosure or remove the barrier.

Recycle separately from general waste under the WEEE directive

Restriction of Hazardous Substances (RoHS)

The European Union RoHS Directive and subsequent regulations introduced in member states and other countries limits the use of six hazardous substances used in the manufacturing of electrical and electronic equipment. Currently, monitoring and control instruments do not fall within the scope of the RoHS Directive, however ABB has taken the decision to adopt the recommendations in the Directive as the target for all future product design and component purchasing.

2 Specification

Mechanical data

Protection

- Front face IP66/ NEMA 4X
- Rear panel IP20

CM30 dimensions

- Height – 97 mm (3.8 in)
- Width – 97 mm (3.8 in)
- Depth behind panel – 121 mm (4.8 in)

CM50 dimensions

- Height – 144 mm (5.6 in)
- Width – 76 mm (3.0 in)
- Depth behind panel – 123 mm (4.9 in)

Materials of construction

Glass filled polycarbonate

CM30 weight

0.5 kg (1.1 lb)

CM50 weight

0.58 kg (1.3 lb)

Electrical

Power supply ranges

- 100 to 240 V AC ±10 % (90 V min. to 264 V max.) 50/60 Hz
- 10 to 36 V DC (optional)

Power consumption

10 W max.

Analog inputs

Universal process inputs

Number 2 (1 standard, 1 optional)

Non-universal process inputs

Number 2 (1 standard, 1 optional)

Outputs

Controls/retransmission outputs

Number	2 (1 standard, 1 optional)
Type	Configurable as analog or digital pulse
Isolation	Galvanically isolated from the rest of the circuitry, 500 V for 1 minute
Analog range	0 to 20 mA programmable
Load	750 Ω max.
Accuracy	0.25 % of output or ±10 µA

Relays

Number	CM30:	4 (1 standard, 3 optional)
	CM50:	4 (2 standard, 2 optional)
Type	CM30:	Standard with changeover contacts Optional contacts selectable as NO or NC (by jumper)
	CM50:	Selectable as NO or NC (by jumper)
Contact ratings	5 A, 240 V	
Update rate	125 ms	

...2 Specification

Digital input/output

Number	6 (2 standard, 4 optional)
Type	User-programmable as input or output Minimum input pulse duration – 125 ms
Input	Volt-free or 24 V DC 1-signal 15 to 30 V 0-signal –3 to 5 V Conforms to IEC 61131-2
Output	Open collector output 30 V, 100 mA max. switched Conforms to IEC 61131-2
Update rate	125 ms

Environmental data

Operating temperature range
0 to 55 °C (32 to 131 °F)
Operating humidity range
5 to 95 % RH (non-condensing)
Storage temperature range
–20 to 70 °C (–4 to 158 °F)

Approvals, certification & general safety

- EN-61010-1
- cULus
- Overvoltage class III on mains, Class II on inputs and outputs
- Pollution category 2
- Insulation category 2

Emissions and Immunity
Meets the requirements of IEC 61326 for an industrial environment

3 Installation

- Locate the controller in a position where its operating temperature and humidity limits will not be exceeded and ensure that it is suitably protected from direct sunlight, rain, snow and hail.
- Select a location away from strong electrical and magnetic fields. If this is not possible (particularly in applications where mobile communications equipment is used), use screened cables within flexible, earthed metal conduit.

Siting

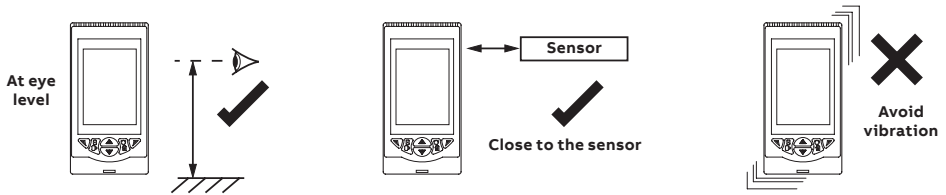

Figure 1 Siting

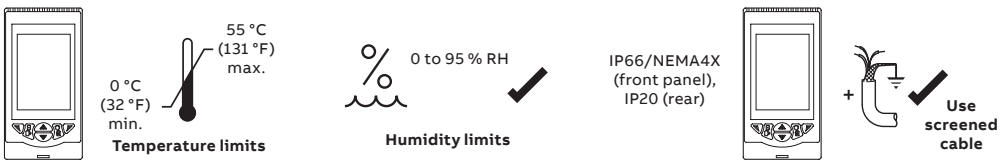

Figure 2 Environmental requirements

...3 Installation

Mounting

ControlMasters CM30 and CM50 are designed for panel mounting. For NEMA4X protection, a panel thickness of 2.5 mm (0.1 in) is required.

Referring to Figure 3:

1 Cut a hole of the correct size for the controller in the panel.

2 Insert the controller into the panel cut-out.

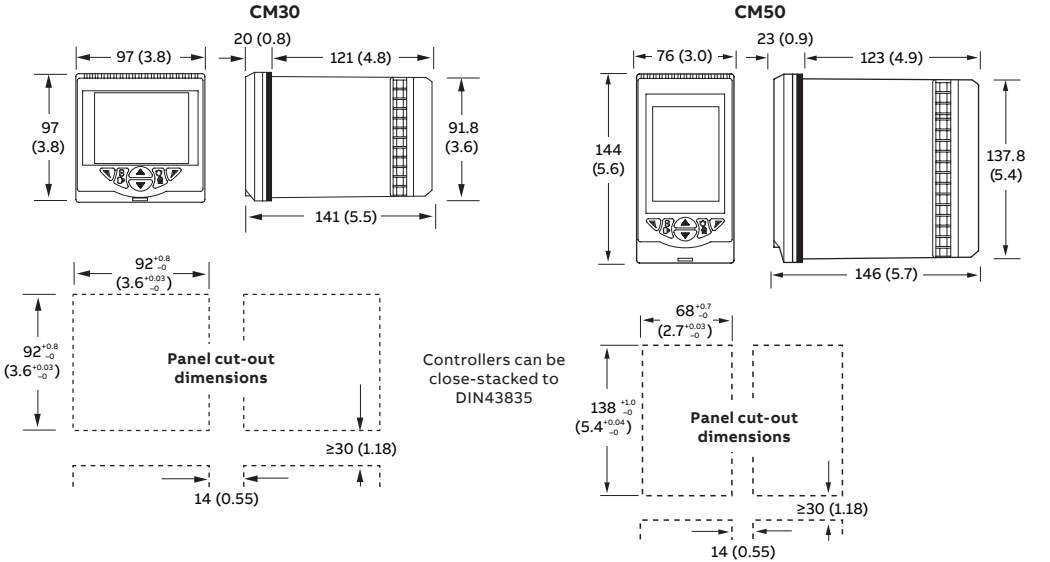

Figure 3 Mounting dimensions

...3 Installation

...Mounting

Referring to Figure 4:

1. Position one panel clamp (A) at the top of the case against the panel.
2. Locate the panel clamp anchor (B) in slot (C).
3. Tighten the panel clamp anchor screw (D) until panel clamp (A) is lightly touching the panel
4. Repeat steps 1 to 3 to fit the remaining panel clamp (E) and panel clamp anchor (F)
5. Torque tighten both panel clamp anchor screws to 0.1 N·m (0.9 lbf·in).

NOTICE

Do not over-tighten the screws.

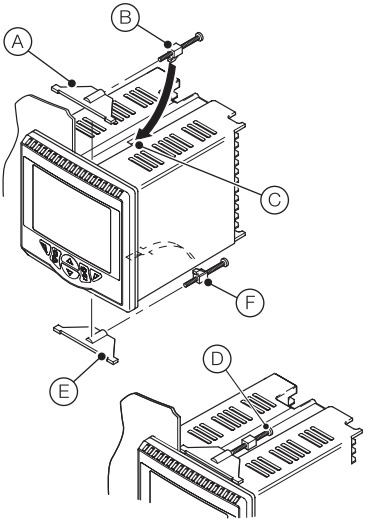

Figure 4 Panel clamp assembly

4 Electrical connections

⚠ WARNING

- The controller is not fitted with a switch therefore a disconnecting device such as a switch or circuit breaker conforming to local safety standards must be fitted to the final installation. It must be fitted in close proximity to the controller within easy reach of the operator and must be marked clearly as the disconnection device for the controller. A fuse must be fitted in accordance with **CM30 electrical connections** on page 17 and **CM50 electrical connections** on page 18.
- Remove all power from the supply, relay and any powered control circuits and high common mode voltages before accessing or making any connections.
- Use cable appropriate for the current loads: 3-core cable rated 3 A and 90 °C (194 °F) minimum, that conforms to either IEC 60227 or IEC 60245. The terminals accept cables from 0.8 to 2.5 mm^2 (18 to 14 AWG).

- The controller conforms to installation category II of IEC 61010.
- All connections to secondary circuits must have basic insulation.
- After installation there must be no access to live parts, for example, terminals.
- Terminals for external circuits are for use only with equipment with no accessible live parts.
- If the controller is used in a manner not specified by the company, the protection provided by the equipment may be impaired.
- All equipment connected to the controller's terminals must comply with local safety standards (IEC 60950, EN601010-1)

...4 Electrical connections

NOTICE

- Always route signal leads and power cables separately, preferably in earthed (grounded) metal conduit.
- Use screened cable for signal inputs and relay connections.
- Replacement of the internal battery (type Varta CR1620 3V lithium cell) must be carried out by an approved technician only

Accessing the connection terminals

Referring to Figure 5, press terminal cover release catch (A) and pull the terminal cover (B) away from the controller body.

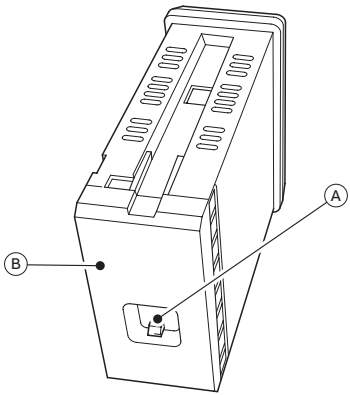

Figure 5 Removing terminal cover

CM30 electrical connections

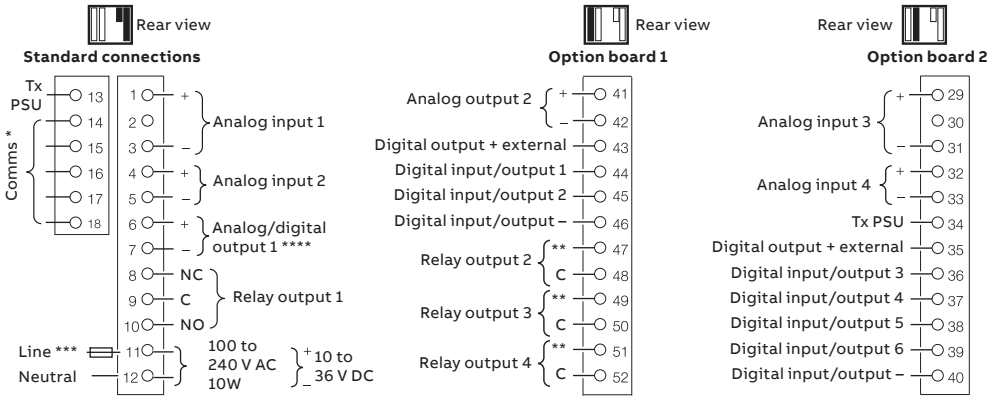

* Refer to the Communications Supplement (IM/CM/C-EN) for MODBUS connection details

** N/O or N/C contact selection is made via internal jumper links. N/O is the factory default setting.

*** 200 mA type T fuse (mains AC) or 2 A type T fuse (120 V DC max.) and external isolating switch. For UL-marked controllers the fuse must be UL recognized.

**** Provides 24 V digital output (observe + and – connections).

Option board 1A

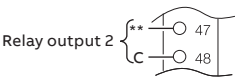

...4 Electrical connections

CM50 electrical connections

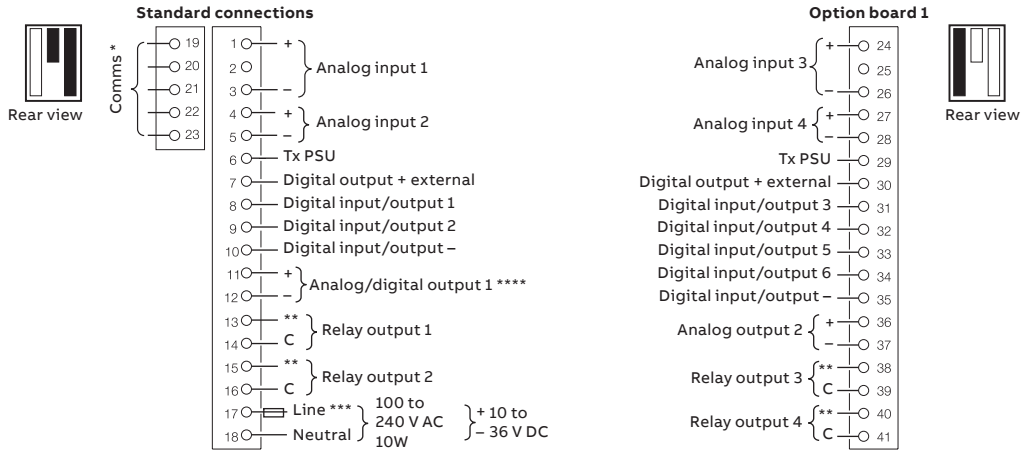

* Refer to the Communications Supplement (IM/CM/C-EN) for MODBUS connection details

** N/O or N/C contact selection is made via internal jumper links.
N/O is the factory default setting.

*** 200 mA type T fuse (mains AC) or 2 A type T fuse (120 V DC max.) and external isolating switch. For UL-marked controllers the fuse must be UL recognized.

**** Provides 24 V digital output (observe + and – connections).

Standard analog inputs (1 and 2)

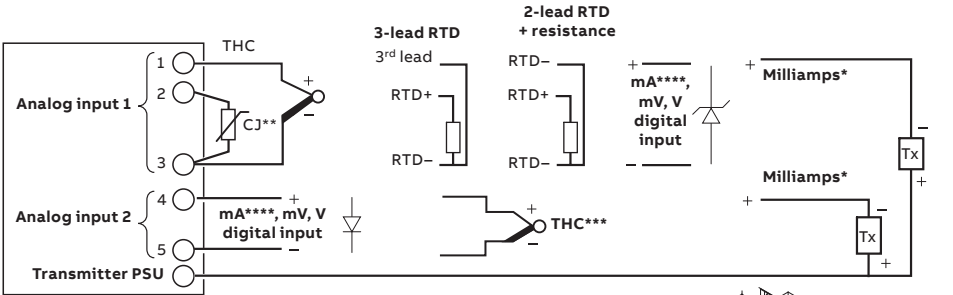

* Using internal transmitter power supply.

** Fit the CJ sensor supplied if analog input 1 or 2 are THC inputs. Alternatively, it is possible to use an external fixed cold (reference) junction if the controller is programmed for use with millivolt inputs and the appropriate thermocouple linearizer is selected.

*** Analog input 2 can be used with THC inputs only if analog input 1 is also used as a THC input.

**** For mA input types, to ensure loop continuity when the controller is switched off, fit a 2V7 Zener diode as shown.

Note. 3-lead RTD leads must have equal resistance, not exceeding 20 Ω each.

5 Front panel keys

Operation is performed using the keys on the front panel. These enable local navigation and selection of software options on all displays, acknowledgment of alarms and error messages, monitoring and access to all menus.

All diagnostics messages are displayed within the **Diagnostics View.**

Prompts associated with active keys are displayed on each screen. Diagnostic and display icon descriptions are included in this document.

Key functions for the controller overlay are described below:

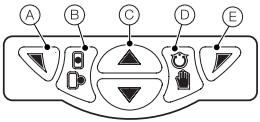

Ⓐ Navigation key (left)/operator level access key.

Ⓑ Local /Remote setpoint mode selection key.

Ⓒ Up/Down keys – navigate up/down menu items and increase/decrease displayed values.

Ⓓ Auto/Manual control mode selection key.

Ⓔ Navigation key (right)/programmable soft key.

Note. When a soft key option is assigned to key Ⓔ, the **Advanced Level** (see page 23) must be accessed using key Ⓐ.

6 Operator level menus

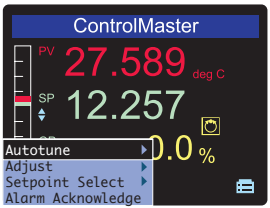

Operator level menus are used to adjust setpoints and outputs, select setpoints, select the view and to enter **Basic** and **Advanced** modes (via the **Access Level**).

To access **Operator Level** menus:

1. From the **Operator Page**, press ◥ to view the available menus.
2. Use the ▲ and ▼ keys to scroll through the menus and menu options.
3. Press ◤ to expand menu levels and to select menu options or press ◥ to return to the previous menu.

Autotune	Used to start or stop an **Autotune** routine. This menu is enabled only if **Autotune** mode is On.
Adjust	Enables a value to be adjusted using the ▲ and ▼ keys. The ▲▼ icon next to a value indicates the current adjustable selection.
Setpoint Select	Selects the local setpoint to be used (displayed only if more than 1 local setpoint is configured).
Alarm Acknowledge	Acknowledges any active but unacknowledged alarms.
View Select	Selects the **Operator view** to be displayed.
Enter Advanced Level	Displays the **Access Level** selection views.
Profile	Displays the profile level selection views.

...6 Operator level menus

Profile operator page

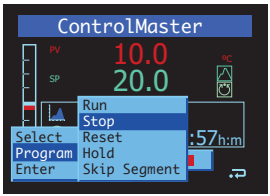

Run	Start the selected profile program (from **Stop** or **Operator Hold**).
Stop	Stop a profile program that is running.
Reset	Restart the profile from the beginning of the program.
Hold	Pause the currently running program (**Operator Hold**).
Skip Segment	Abandon the current segment and start the next segment.
Repeat Segment	Return to the beginning of the current segment.
Fast Run Mode	Run the profile 8 times faster than normal rate.

7 Access levels and security options

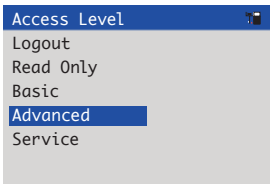

The access level menus are used to enter the **Basic** and **Advanced** menus, view all parameters in read only mode and to logout (return to operator view mode).

To view **Access Level** menus:

1 From the operator view mode, press ◩
OR
press ◥ to display the available operator menus and use the ▲ and ▼ keys to scroll to **Enter Config. Mode**, then press ◩. The **Access Level** menu is displayed.

2 Use the ▲ and ▼ keys to scroll to the required/permitted level of access (basic or advanced), then press ◩.

Logout	Displayed after basic or advanced level are accessed. Logs the user out of basic or advanced level. If passwords are set, a password must be entered to access the levels again after selecting log out.
Read Only	Enables all parameter settings to be viewed.
Basic	Enables access to the basic level and adjustment of totalizer count settings and alarm trip points.
Advanced	Enables configuration access to all parameters.
Service	Reserved for use by authorized personnel.

Security options

Passwords can be set to enable secure end-user access at 2 levels: **Basic** and **Advanced**. The **Service** level is password protected and reserved for factory use only.

Passwords are set, changed or restored to their default settings at the device setup/security setup parameter.

8 Diagnostics messages

The controller is programmed to display diagnostics messages that provide information on servicing requirements and any other conditions that develop during operation.

When a diagnostics condition is detected, the associated NAMUR Icon, together with the highest priority diagnostics message are displayed in the status bar when in operator view. A list of all currently active diagnostic alarm states are displayed in the diagnostic view.

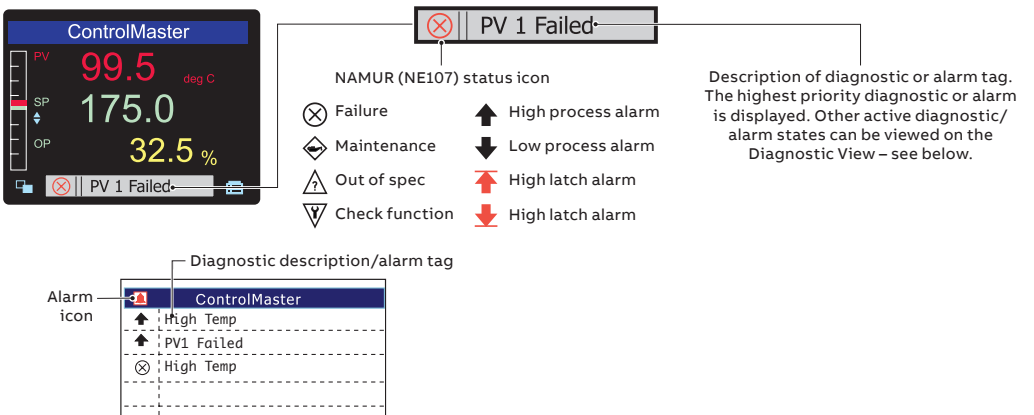

Icon	Number/ Message	Possible cause	Suggested action
⊗	242.004 ADC 1 Failed	Temporary or permanent failure of analog to digital converter on the main I/O board.	Cycle power to controller. If problem persists replace main I/O board. Contact local service organization.
⊗	240.005 ADC 2 Failed	Temporary or permanent failure of analog to digital converter on the main I/O board.	Cycle power to controller. If problem persists replace main I/O board. Contact local service organization.
⊗	250.000 (248.001) PV 1 (2) Failed	Problem with input assigned to Loop 1 (2) PV. Broken sensor leads, defective input source or input signal out of permitted range.	Check wiring. Check input source. Check if input signal is outside permitted limits.
⊗	246.002 (244.003) RSP 1 (2) Failed	Problem with Input assigned to Loop 1 (2) Remote Setpoint. Broken sensor leads, defective input source or input signal out of permitted range.	Check wiring. Check input source. Check if input signal is outside permitted limits.
⊗	222.014 (220.015) CJ 1(2) Failed	Error in Cold junction measurement associated with AIN1 (AIN3). Wiring fault or defective sensor.	Check cold junction device is correctly fitted. Ensure I/P 2(4) is turned off. Replace CJ sensor.
⊗	226.012 (224.013) DV 1 (2) Failed	Problem with input assigned to Loop 1 (2) disturbance variable. Broken sensor leads, defective input source or input signal out of permitted range.	Check wiring. Check input source. Check if input signal is outside permitted limits.

...8 Diagnostics messages

Icon	Number/ Message	Possible cause	Suggested action
⊗	230.010 (228.011) WV 1 (2) Failed	Problem with input assigned to Loop 1 (2) wild variable. Broken sensor leads, defective input source or input signal out of permitted range.	Check wiring. Check input source. Check if input signal is outside permitted limits.
⊗	234.008 (232.009) PFB 1(2) Failed	Problem with input assigned to Loop 1 (2) position feedback. Broken sensor leads, defective input source or input signal out of permitted range.	Check wiring. Check input source. Check if input signal is outside permitted limits.
⊗	216.016 NV Error Proc Bd	Failure of non-volatile memory on processor/ display board or permanent corruption of its data.	Check all configuration parameters and correct any errors. Acknowledge error. If problem persists contact local service organization.
⊗	214.017 NV Error Main Bd	Failure of non-volatile memory on main board or permanent corruption of its data.	Check calibration of AIN1, AIN2 and AO1. Recalibrate if necessary. Acknowledge error. If problem persists contact local service organization.
⊗	212.018 NV Error Opt Bd 1	Failure of non-volatile memory on option board 1 or permanent corruption of its data.	**CM50 only** Check calibration of AIN3, AIN4 and AO2. Recalibrate If necessary. Acknowledge error. If problem persists contact local service organization.

Icon	Number/ Message	Possible cause	Suggested action
⊗	210.019 NV Error Opt Bd 2	Failure of non-volatile memory on option board 2 or permanent corruption of its data.	Check calibration of AIN3, AIN4 and AO2. Recalibrate If necessary. Acknowledge error. If problem persists contact local service organization.
⊗	208.020 NV Error Comm Bd	Failure of non-volatile memory on communications board or permanent corruption of its data.	Acknowledge error. Check communications board is correctly identified by controller. If problem persists contact local service organization.
⊗	206.021 NV Error SW Key 1	Failure of non-volatile memory on Software key 1 or permanent corruption of its data.	Acknowledge error. Check software key functionality is enabled. If problem persists contact local service organization.
⊗	204.022 NV Error SW Key 2	Failure of non-volatile memory on Software key 2 or permanent corruption of its data.	Acknowledge error. Check software key functionality is enabled. If problem persists contact local service organization.
⊗	202.023 NV Error SW Key 3	Failure of non-volatile memory on Software key 3 or permanent corruption of its data.	Acknowledge error. Check software key functionality is enabled. If problem persists contact local service organization.

...8 Diagnostics messages

Icon	Number/ Message	Possible cause	Suggested action
	Config Error	The configuration contains a source that is no longer present or valid.	Check invalid sources in Diagnostics menu. Check configuration, check I/O required for configuration is present and correct any illegal use of the invalid signal by changing configuration or fitting additional option cards.
	054.044 (052.045) Tune Lp1 (2) Fail	Autotune has failed to complete its sequence or has calculated values outside of its permitted range.	Check process response. Consider changing the Autotune dynamic setting. Ensure process is stable and repeat autotune. If problem persists tune the loop manually.
	062.042 (058.043) Tuner 1(2) Noise	Autotune has failed due to excessive process or measurement noise	Check input wiring. Ensure process is stable and repeat autotune. If problem persists tune the loop manually.
	070.040 (066.041) Tuner 1(2) Abort	Autotune has been aborted by the user.	
	078.038 (074.039) Adaptive 1(2) Warn	Parameters calculated by adaptive control have changed by more than the permitted amounts.	Check process for issues that may have caused a large change in its dynamics, for example, a blocked valve. Reset adaptive control. Perform a fresh autotune.
	086.036 (082.037) Oscillation 1(2)	Abnormal oscillations in the control loop.	Check process. Perform new manual or Autotune.

Icon	Number/ Message	Possible cause	Suggested action
	094.034 (090.035) Valve 1(2) Sticking	Motorized valve travel time is significantly slower than configured time.	Check valve to identify reason for sticking. Check correct travel time is entered in configuration.
	168.026 (166.027) (164.028) Tuner 1 Phase 1..3	Autotune is in progress.	Autotune can be aborted if required by selecting Manual control mode.
	160.030 (158.031) 156.032) Tuner 2 Phase 1..3	Autotune is in progress.	Autotune can be aborted if required by selecting Manual control mode.
	162.029 (154.033) Tuner 1(2) Pass	Autotune has completed successfully and calculated new control parameters.	Acknowledge diagnostic.
	178.025 In Configuration	The device is currently in the configuration mode.	This is for use with remote access via digital communications.

9 Instrument menus

Basic level

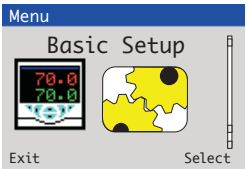

Loop 1 (2) Setpoints
- Local Setpoint 1 (4)
- RSP Ratio
- RSP Bias
- Ramp Mode
- Ramp Rate

Loop 1 (2) Control
- On/Off Hysteresis
- Mode
- Autotune
- PID
- FeedForward

■ Loop 1 (2) Mot Valve
- Ratio
- Bias
- Deadband
- Travel Time

Loop 1 (2) Time Prop
- Cycle Time 1 (2)

Alarm 1 (8)
- Trip

Advanced levels

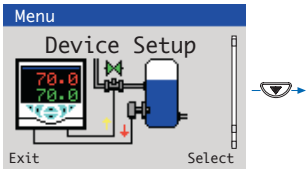

Initial Setup
- App. Template
- Loop 1 (2) Output Type
- Loop 1 (2) Split O/P
- Instrument Tag
- Loop 1 (2) Tag
- Mains Freq.
- Config Action

■ Custom Template
- Analog 1 (2) Eng. Units
- Tot. 1 (2) Eng. Units

Security Setup
- Basic Password
- Advanced Password
- Reset Passwords

■ Custom Config
- Loop 1 (2) PV
- Loop 1 (2) Split O/P
- Loop 1 (2) Valve O/P
- Loop 1 (2) Valve FB
- Loop 1 (2) TP OP1 (2)
- Loop 1 (2) RSP

IrDA Configuration
- Setup
- Config. Description

Note. When in **Advanced Level** (configuration) mode, press and hold the key to return to the standard Operator page.

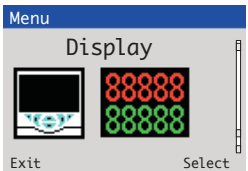

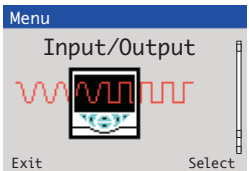

Continued overleaf

Language

Operator Templates
- Page 1 (4) Template

Operator Functions
- Autoscroll
- Soft Key Function
- Auto Manual Enable
- Local Remote Enable
- Alarm Ack. Enable
- Totalizer Stop/Go
- Totalizer Reset
- SP Adjust Enable

■ Profiler

▲ Chart View
- Channel 1 (2)
- Sample Rate

Settings
- Brightness
- Contrast

■ Date & Time
- Date Format
- Time & Date
- Daylight Saving
- DS Start Time
- DS Start Occur
- DS End Occur
- DS Start Day
- DS End Day
- DS Start Month
- DS End Month

■ Customise Pages
- Page Number
- Template Type
- Titlebar Tag
- Parameters
- Bargraphs
- Icons
- Page Colors

Analog Inputs
- Analog Input 1 (4)

Analog Outputs
- Analog Output 1 (4)

Digital I/O
- Digital IO 1 (6)

Relays
- Relay 1 (4/6)

Key

■ Standard and extended/dual functionality

▲ Extended/dual functionality only

...9 Instrument menus

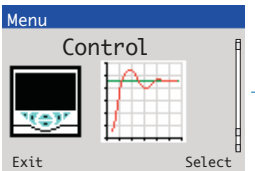

Loop 1 (2) Setpoints
- Low Limit
- High Limit
- No. of Local SP's
- Local Setpoint 1 (4)
- Track Mode
- RSP Ratio
- RSP Bias
- RSP Fault Action
- Default Setpoint
- Ramp Mode
- Ramp Rate
- Select Sources

Loop 1 (2) Control
- Control Type
- Control Action
- On/Off Hysteresis
- Autotune
- PID
- ■ Gain Scheduling
- ▲ FeedForward
- ▲ Adaptive Control
- Misc.

Loop 1 (2) Output
- Limits
- Failure Actions
- A/M Select Sources
- Slew Rate
- Tracking

Loop 1 (2) Split O/P
- Min Input 1 (2)
- Min OP 1 (2)
- Max Input 1 (2)
- Max OP 1 (2)
- ■ Loop 1 (2) Valve
  - Ratio
  - Bias
  - Deadband
  - Travel time
- ■ Loop 1 (2)
  - Time Prop
  - Cycle Time 1 (2)

Output Switching
- Switch Enable
- Switch Source

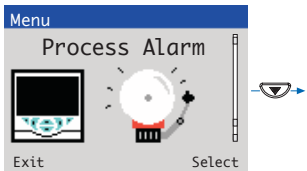

Alarm 1 (8)
- Type
- Tag
- Source
- Trip
- Hysteresis
- Time Hysteresis
- Display Enable

Acknowledge Source

Enable Source

Key

■ Standard and extended/dual functionality

▲ Extended/dual functionality only

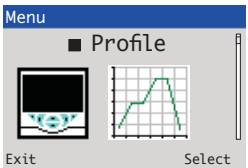

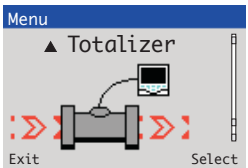

Continued overleaf

- Common Settings
  - SPT Start Condition
  - Ramp Control
  - Program Control
  - Recovery
  - Segment Options
  - PV Event Trip
  - User Value Limits
  - Fast Run Mode
- Enter Program
  - Program No
  - Name
  - Repeat Count
  - Setpoint Start/End
  - Holdback Hysteresis
  - Enter Segments
  - Guaranteed
  - Ramp/soak
  - Event 1 to 8
  - PV Event
  - Timed Event Offset
  - Timed Event Length
  - User Value

- Totalizer 1 (2)
  - Mode
  - Source
  - Count Direction
  - Units
  - Count Rate
  - Cutoff
  - Stop Go Source
  - Total DPs
  - Preset Count
  - Predet Count
  - Intermediate Count
  - Wrap Enable
  - Reset Source
  - Reset Days
  - Reset Hour

...9 Instrument menus

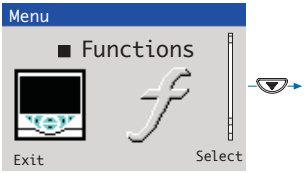

Logic Equations
- Equation Number
- Operand 1
- Invert 1
- Operator 1

Math Blocks
- Math Block Number
- Block Type
- Eng. DPs
- Eng. Low /
- Eng. High
- Eng. Units
- Fault Action

Linearizer 1 (2)

Delay Timer 1 (2)
- Source
- Delay Time
- On Time

Real Time Alarms
- Real Time
- Alarm 1 (2)

Bank Control
- Bank Size
- Control Source
- Bank 1 (6)

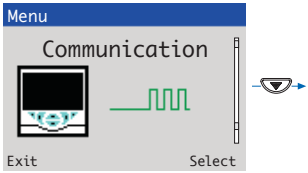

Refer to the IM/CM/C-EN for parameter details.

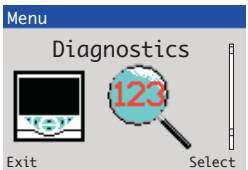

Diagnostic History

Source Analysis
- Analog Source
- Digital Source
- Invalid Sources



Instrument Type
I/O Build
No. Analog Inputs
No. Analog Outputs
No. Relays
No. Digital I/O
Functionality
Serial No.
Hardware Revision
Software Revision

Return to Device Setup screen (see page 30)

CM30 sales

CM50 sales

CM30/50 service

CM 30 software

CM50 software

ABB Limited
Measurement & Analytics
Howard Road, St. Neots
Cambridgeshire, PE19 8EU
UK
Tel: +44 (0)1480 475 321
Fax: +44 (0)1480 217 948
Email: instrumentation@gb.abb.com

ABB Inc.
Measurement & Analytics
125 E. County Line Road
Warminster, PA 18974
USA
Tel: +1 215 674 6000
Fax: +1 215 674 7183

abb.com/measurement

We reserve the right to make technical changes or modify the contents of this document without prior notice. With regard to purchase orders, the agreed particulars shall prevail. ABB does not accept any responsibility whatsoever for potential errors or possible lack of information in this document.

We reserve all rights in this document and in the subject matter and illustrations contained therein. Any reproduction, disclosure to third parties or utilization of its contents – in whole or in parts – is forbidden without prior written consent of ABB.

© ABB 2020

CI/CM30/50-EN REV. C 10.2020