S.RC - 1/2" drive locking extensions



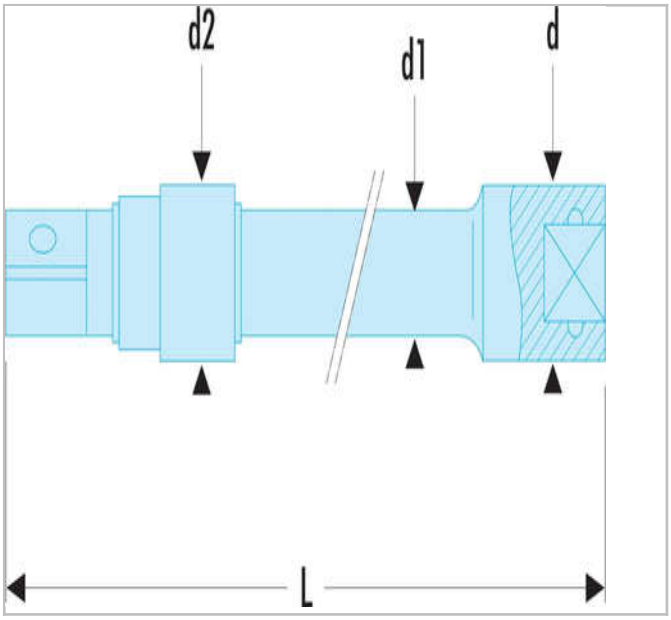

Standards:

NF ISO 3316, ISO 3316, DIN 3123, ASME B107.10

Description:

- Total safety as lock system prevents socket loss.
- Safety and instant release, by retracting knurled ring, for total user confidence.
- Positive locking for use with sockets with internal ball notch.
- Finish: bright chrome with phosphate-hardened ring.

© FACOM 2020

	Diameter [mm]	Diameter D1 [mm]	Diameter D2 [mm]	Length L [mm]	Thickness E [mm]	Square [in]	Weight [g]
S.210RC	23.0	16.5	23.0	130.0	16.5	1/2	250.0
S.215RC	23.0	16.5	23.0	250.0	16.5	1/2	450.0
S.217RC	23.0	16.5	23.0	500.0	16.5	1/2	860.0

© FACOM 2020