Sensitive Low Pressure/Vacuum Switches (Series 1)

Stock N^{os}			Pressure range
397-1107	**397-1135**	**397-2302***	25.0-125.0 mbar (10.0-50.0 ins H_2O)
397-1113	**397-2368**	**397-1157***	62.5-500.0 mbar (25.0-200 ins H_2O)
397-1129	**397-1141**	**397-1163***	0.25-1.35 bar (3.6-20.0 P.S.I.)

* Pressure port only

Sensitive, field adjustable pneumatic switches, that have connections to both sides of the diaphragm. The switches can therefore be used in either pressure, vacuum or differential modes. The single pole contacts remain in the normally open position until a differential pressure is applied across the diaphragm. As the pressure is increased, the diaphragm causes the cantilevered contact blade to deflect. Because it is a slow make contact and there are no sliding or levering parts the switches have virtually no hysterisis or on–to–off mechanical differential. The switch electrical rating will be reduced when used at the minimum pressure setting.

Applications include monitoring air pressure across filters to detect filter blocking, alarm control for positively pressurised areas or enclosures. The low swept volume of the switch and low inertia of the diaphragm makes it ideal for pulse counting applications.

The switches are designed for low current and logic applications, such as LED indicators and solid state relays. For inductive loads, a varistor or R-C snubber circuit is recommended. The switching of heavier loads requires an interface device, such as a solid state relay. (see Solid State Relay section)
The switches may also be used with the RS range of air actuators and accessories (see Switch section).

397-1107
397-1113
397-1129

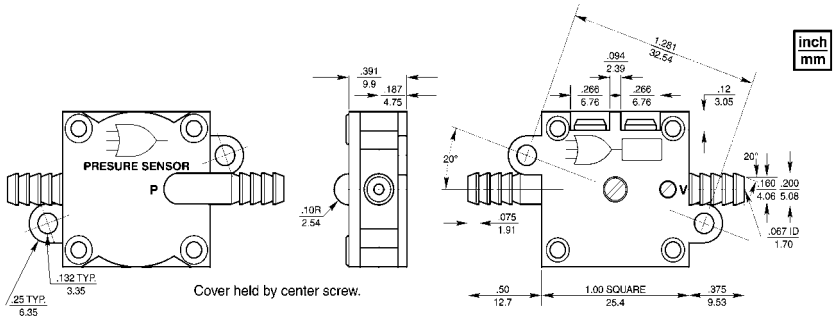

397-1135
397-2368
397-1141

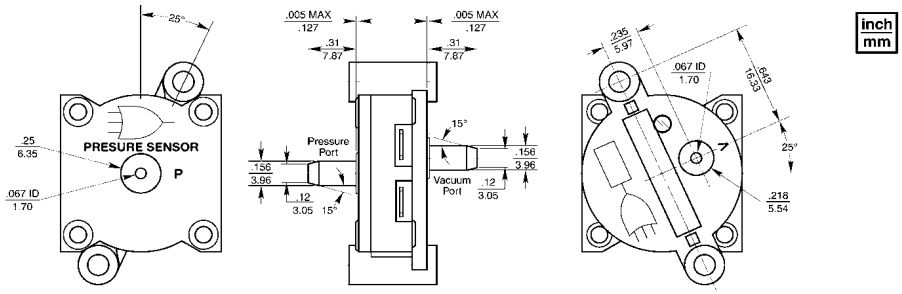

FOR FURTHER INFORMATION TEL: +44 (0)1284 701422 FAX: +44 (0)1284 753112
e-mail info@herga.com WEB PAGE www.herga.com

ISSUE 01
2001

As a consequence of our policy of continual improvement, we reserve the right to change without notice any detail in this publication. Please see our Conditions of Sale.

397-2302
397-1157
397-1163

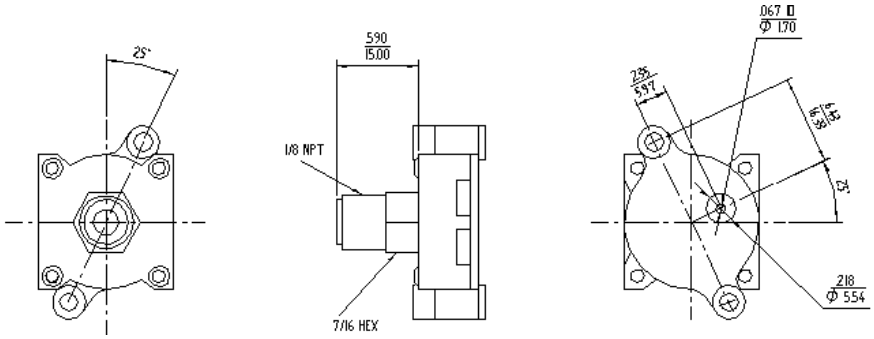

Technical specification

Pressure range:	25.0 mbar to 1.35 bar (10.0ins H_2O to 20 PSI)
Electrical:	SPST N/O
Contact Rating	10-20 mA 250Vac
Fluid Medium	Wide range of media
Burst pressure	1.7 bar (20 PSI)
Mechanical Life	$1.0x10^6$ cycles
Operating temp	-40 to 85°C
Contacts	Phosphor bronze with gold inlay.
Diaphragm	Polyurethane
Case material	Glass filled polyester
Weight	10 grams

FOR FURTHER INFORMATION TEL: +44 (0)1284 701422 FAX: +44 (0)1284 753112
e-mail info@herga.com WEB PAGE www.herga.com
ISSUE 01
2001

As a consequence of our policy of continual improvement, we reserve the right to change without notice any detail in this publication. Please see our Conditions of Sale.