LT8922

Electronic level and temperature sensor

LT0264B-B-00KSSKG/US

For 8-pole sockets the core colours are not standardised.
Please note the wiring of the sensor and the sockets (see data sheet).

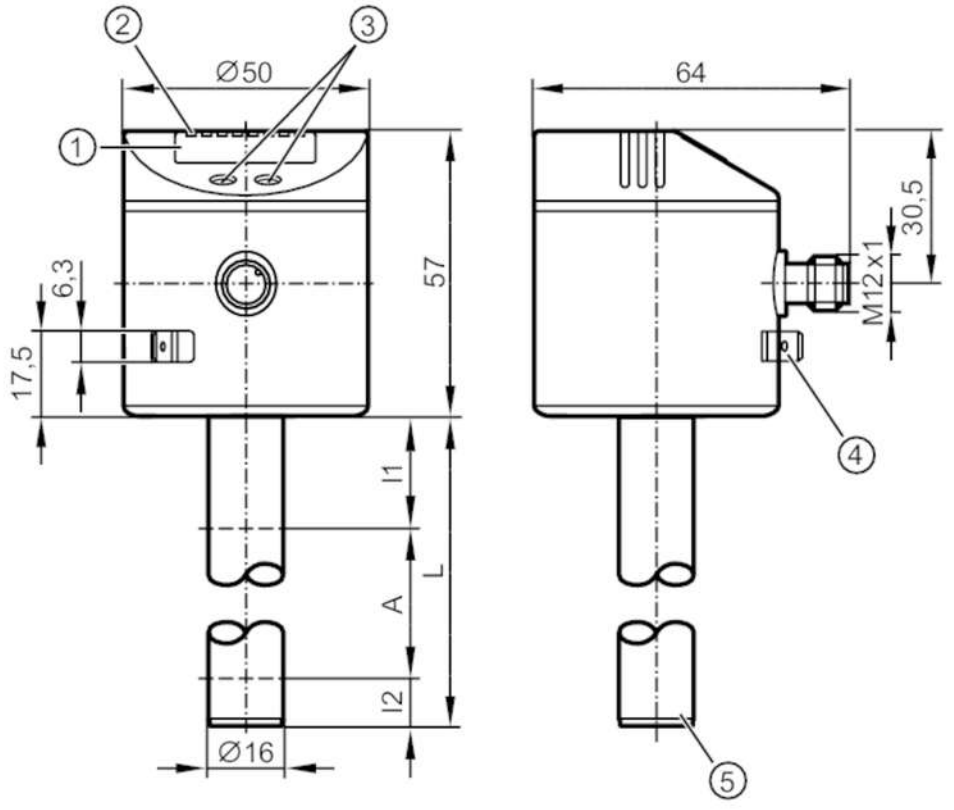

1 alphanumeric display 4-digit
2 status LEDs
3 programming buttons
4 housing connection flat-pin connector 6.3 mm DIN 46244
5 position of the temperature measuring element

Product characteristics		
Number of inputs and outputs		Number of digital outputs: 4
Factory setting		2 switching outputs level (OUT1, OUT2); 2 switching outputs temperature (OUT3, OUT4); mineral oils
Probe length L	[mm]	264
Application		
Media		hydrous coolants; oils; oil-based media; water; media similar to water
Dielectric constant of the medium		> 2
Cannot be used for		extremely conductive media; adhering media; granulates; bulk material; acids; alkali
Pressure rating	[MPa]	0.05
Note on pressure rating		when mounting with mounting accessories: E43001 - E43007, E43019
Coolants		
Medium temperature	[°C]	0...35; (with climatic tube E43100 35...65 °C)
Oil		
Medium temperature	[°C]	0...70

LT8922

Electronic level and temperature sensor

LT0264B-B-00KSSKG/US

Medium temperature short time	[°C]	0...90; (< 1 h)
Water		
Medium temperature	[°C]	0...35; (with climatic tube E43100 35...65 °C)
Electrical data		
Operating voltage	[V]	18...30 DC
Current consumption	[mA]	< 50
Protection class		III
Reverse polarity protection		yes
Power-on delay time	[s]	< 3
Measuring principle		capacitive
Inputs / outputs		
Number of inputs and outputs		Number of digital outputs: 4
Outputs		
Total number of outputs		4
Output signal		switching signal; IO-Link
Electrical design		PNP/NPN
Number of digital outputs		4
Output function		normally open / normally closed; (parameterisable)
Max. voltage drop switching output DC	[V]	2.5
Permanent current rating of switching output DC	[mA]	200
Short-circuit protection		yes
Type of short-circuit protection		thermal, pulsed
Overload protection		yes
Measuring/setting range		
Factory setting		2 switching outputs level (OUT1, OUT2); 2 switching outputs temperature (OUT3, OUT4); mineral oils
Probe length L	[mm]	264
Active range A	[mm]	195
Inactive range I1 / I2	[mm]	53 / 16
Setting range		
Set point SP	[mm]	25...190
Reset point rP	[mm]	20...195
In steps of	[mm]	5
Reference point OP	[mm]	69 - 82 - 94 - 106 - 118 - 130 - 143 - 155 - 167 - 179 - 191 - 204 - OFF
Hysteresis, OP	[mm]	2
Temperature monitoring		
Measuring range	[°C]	-20...90
Set point SP	[°C]	-19.5...90
Reset point rP	[°C]	-20...89.5
In steps of	[°C]	0.5

LT8922

Electronic level and temperature sensor

LT0264B-B-00KSSKG/US

Resolution of switching output	[K]	0.5	
Accuracy / deviations			
Measuring error [% of the final value]		± 5	
Repeatability		± 2	
Resolution	[mm]	5	
Temperature monitoring			
Switch point accuracy	[K]	± 1,5	
Resolution	[K]	0.5	
Dynamic response T09	[s]	90	
Software / programming			
Parameter setting options		hysteresis / window; normally open / normally closed; SP/rP position; OP position; adjustment OP; medium selection; offset setting; Display unit; process value assignment	
Interfaces			
Communication interface		IO-Link	
Transmission type		COM2 (38,4 kBaud)	
IO-Link revision		1.1	
SDCI standard		IEC 61131-9	
Profiles		Smart Sensor: Process Data Variable; Device Identification, Device Diagnosis	
SIO mode		yes	
Required master port type		A	
Process data analogue		4	
Process data binary		4	
Min. process cycle time	[ms]	4.5	
Supported DeviceIDs		**Type of operation**	**DeviceID**
		default	1530
Operating conditions			
Ambient temperature	[°C]	0...60	
Storage temperature	[°C]	-25...80	
Protection		IP 67	
Tests / approvals			
EMC		DIN EN 61000-6-2	
		DIN EN 61000-6-4	
Shock resistance		DIN EN 60068-2-27	15 g (11 ms)
Vibration resistance		DIN EN 60068-2-6	5 g (10...2000 Hz)
MTTF	[years]	225	
Mechanical data			
Weight	[g]	289	
Dimensions	[mm]	Ø 16	
Materials		stainless steel (304/1.4301); stainless steel (316L/1.4404); FKM; NBR; PBT; PC; PP; PA; TPV	
Materials (wetted parts)		PP	

LT8922

Electronic level and temperature sensor

LT0264B-B-00KSSKG/US

Displays / operating elements		
Display	Display unit	2 x LED, green (cm, °C)
	switching status	4 x LED, yellow (OUT4...OUT1)
	measured values	alphanumeric display, 4-digit
	parameter setting	alphanumeric display, 4-digit

Remarks	
Pack quantity	1 pcs.

Electrical connection

Connector: 1 x M12; coding: A



Connection

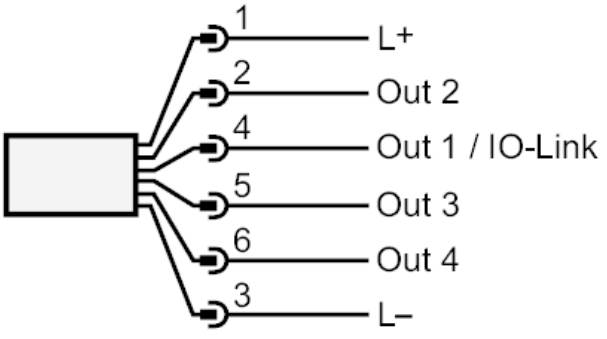

OUT1: switching output IO-Link
OUT2...4: switching output