# DATASHEET - EASY-E4-DC-12TCX1P



**Control relays, Expandable, networkable (Ethernet), 24 V DC, Digital: 8, of which can be used as analog: 4, Quantity of outputs: Transistor: 4, Push-in terminals**

**Part no.** EASY-E4-DC-12TCX1P
**Catalog No.** 197507

## Delivery program

| | | | |
|---|---|---|---|
| Basic function | | | easyE4 base device |
| Description | | | Electronic control relay<br>Rated operating voltage 24V DC<br>8 digital inputs for 24 VDC<br>of these, 4 inputs can also be used as analog inputs and 4 inputs as fast counters<br>4 transistor outputs for 24 VDC<br>with diagnostic LEDs<br>Real-time clock<br>with Ethernet interface<br>Expandable with the easyE4 series of digital input/output expansions with easy-E4-CONNECT1 connector (Item Y7-197225)<br>Expandable with communications modules EASY-COM-...<br>Push in terminals |
| **Inputs** | | | |
| Digital | | | 8 |
| of which can be used as analog | | | 4 |
| **Outputs** | | | |
| Quantity of outputs | | | Transistor: 4 |
| **Additional features** | | | |
| Real time clock | | | # |
| Expansions | | | Expandable<br>networkable (Ethernet) |
| Supply voltage | | | 24 V DC |
| Software | | | EASYSOFT-SWLIC/easySoft 7 |
| Connection type | | | Push-in terminals |

## Technical data

### General

| | | | |
|---|---|---|---|
| Standards | | | EN 61000-6-2<br>EN 61000-6-3<br>IEC 60068-2-6<br>IEC 60068-2-27<br>IEC 60068-2-30<br>IEC/EN 61131-2<br>EN 61010<br>EN 50178 |
| Approvals | | | |
| Approvals | | | cULus |
| certificate | | | CE |
| shipping classification | | | DNV GL |
| Dimensions (W x H x D) | | mm | 71.5 x 90 x 58 |
| Weight | | kg | 0.139 |
| Mounting | | | Top-hat rail IEC/EN 60715, 35 mm or screw fixing using fixing brackets ZB4-101-GF1 (accessories) |
| Connection type | | | Push-in terminals |
| Ethernet | | | |
| Connections | | | RJ45 plug, 8-pin |
| Cable | | | CAT5 |

### Terminal capacities

| | | | |
|---|---|---|---|
| Push-in terminals | | | |

| | | | |
|---|---|---|---|
| Solid | | $mm^2$ | 0.2 - 2.5 |
| flexible | | $mm^2$ | 0.2 - 2.5 |
| Solid or flexible conductor, with ferrule | | $mm^2$ | 0,25 - 1,5 |
| Solid or stranded | | AWG | 24 - 14 |
| Standard screwdriver | | mm | 0.4 x 2.5 |
| Stripping length | | mm | 8 |

## Display

| | | | |
|---|---|---|---|
| Status indicator (LED) | | | Power/RUN<br>Ethernet |

## Climatic environmental conditions

| | | | |
|---|---|---|---|
| Operating ambient temperature | | °C | -25 to 55, cold as per IEC 60068-2-1, heat as per IEC 60068-2-2 |
| Condensation | | | Take appropriate measures to prevent condensation |
| Storage | ϑ | °C | -40 - +70 |
| relative humidity | | % | in accordance with IEC 60068-2-30, IEC 60068-2-78<br>5 - 95 |
| Air pressure (operation) | | hPa | 795 - 1080 |

## Ambient conditions, mechanical

| | | | |
|---|---|---|---|
| Protection type (IEC/EN 60529, EN50178, VBG 4) | | | IP20 |
| Vibrations | | Hz | In accordance with IEC 60068-2-6<br>constant amplitude 0.15 mm: 10 - 57<br>constant acceleration 2 g: 57 - 150 |
| Mechanical shock resistance (IEC/EN 60068-2-27) semi-sinusoidal 15 g/11 ms | | Impacts | 18 |
| Drop to IEC/EN 60068-2-31 | Drop height | mm | 50 |
| Free fall, packaged (IEC/EN 60068-2-32) | | m | 0.3 |
| Mounting position | | | Vertical or horizontal |

## Electromagnetic compatibility (EMC)

| | | | |
|---|---|---|---|
| Overvoltage category/pollution degree | | | III/2 |
| Electrostatic discharge (ESD) | | | |
| applied standard | | | nach IEC/EN 61000-4-2 |
| Air discharge | | kV | 8 |
| Contact discharge | | kV | 6 |
| Electromagnetic fields (RFI) to IEC EN 61000-4-3 | | V/m | 0.08 - 1.0 GHz: 10<br>1.4 - 2 GHz: 3<br>2.0 - 2.7 GHz: 1 |
| Radio interference suppression | | | EN 61000-6-3 Class B |
| Burst | | kV | according to IEC/EN 61000-4-4<br>Supply cables: 2<br>Signal cables: 2 |
| power pulses (Surge) | | | according to IEC/EN 61000-4-5<br>0.5 kV (supply cables, symmetrical)<br>1 kV (supply cables, asymmetrical) |
| Immunity to line-conducted interference to (IEC/EN 61000-4-6) | | V | 10 |

## Insulation resistance

| | | | |
|---|---|---|---|
| Clearance in air and creepage distances | | | nach EN 50178, EN 61010-2-201, UL61010-2-201, CSA-C22.2 NO. 61010-2-201 |
| Insulation resistance | | | per EN 50178, EN 61010-2-201, UL61010-2-201, CSA-C22.2 NO. 61010-2-201 |

## Back-up of real-time clock

| | | | |
|---|---|---|---|
| Back-up of real-time clock | | | 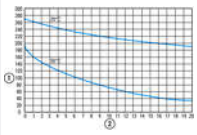 |
| | | | ① Backup time (hours) with fully charged double layer capacitor<br>② Service life (years) |
| Accuracy of the real-time clock | | s/day | typ. ± 2 (± 0.2 h/Year) |
| | | | depending on ambient air temperature fluctuations of up to ± 5 s/day (± 0.5 h/year) are possible |

## Repetition accuracy of timing relays

| | | | |
|---|---|---|---|
| Accuracy of timing relays (of values) | | % | ± 0.02 |
| Resolution | | | |
| Range “S” | | ms | 5 |
| Range “M:S” | | s | 1 |
| Range “H:M” | | min | 1 |

## Power supply

| | | | |
|---|---|---|---|
| Rated operational voltage | $U_e$ | V | 24 DC (-15/+20%) |
| Permissible range | $U_e$ | | 20.4 - 28.8 V DC |
| Residual ripple | | % | ≦ 5 |
| Protection against polarity reversal | | | yes |
| Input current | | | max. 80 mA at Ue |
| Voltage dips | | ms | ≤ 10 |
| Fuse | | A | ≧ 1A (T) |
| Power loss | P | W | Normally 2 |
| Heat dissipation at 24 V DC | | W | 2 |

## Digital inputs 24 V DC

| | | | |
|---|---|---|---|
| Number | | | 8 |
| Inputs can be used as analog inputs | | | 4 (I5, I6, I7, I8) |
| Potential isolation | | | from power supply: no<br>to the memory card: no<br>to Ethernet: yes<br>between inputs: no<br>from the outputs: yes<br>to expansion devices: yes |
| Rated operational voltage | $U_e$ | V DC | 24 |
| Input voltage | | V DC | Signal 0: ≦ 5 (I1 - I8)<br>Condition 1: ≧ 15 (I1 - I8) |
| Input current at signal 1 | | mA | 3.3 (I1 – I4)<br>1.8 (I5 – I8) |
| Deceleration time | | ms | 20 (0 -> 1/1 -> 0, Debounce ON)<br>type 0.015 (0 -> 1/1 -> 0, Debounce OFF) |
| Cable length | | m | 100 (unshielded) |
| Frequency counter | | | |
| Number | | | 4 (I1, I2, I3, I4) |
| Counter frequency | | kHz | ≦ 5 |
| Pulse shape | | | Square |
| Pulse pause ratio | | | 1:1 |
| Cable length | | m | ≦ 20 (screened) |
| Incremental counter | | | |
| Number of counter inputs | | | 2 (I1 + I2, I3 + I4) |
| Value range | | | -2147483648 to +2147483647 |
| Counter frequency | | kHz | ≦ 5 |
| Pulse shape | | | Square |
| Signal offset | | | 90° |
| Pulse pause ratio | | | 1:1 |
| Cable length | | m | ≦ 20 (screened) |
| Rapid counter inputs | | | |
| Number | | | 4 (I1, I2, I3, I4) |
| Value range | | | -2147483648 to +2147483647 |
| Counter frequency | | kHz | ≦ 10 |
| Pulse shape | | | Square |
| Pulse pause ratio | | | 1:1 |
| Cable length | | m | ≦ 20 (screened) |

## Analog inputs

| | | | |
|---|---|---|---|
| Number | | | 4 (I5, I6, I7, I8) |
| Potential isolation | | | from power supply: no<br>to the memory card: no<br>to Ethernet: yes<br>between inputs: no<br>from the outputs: yes<br>to expansion devices: yes |
| Input type | | | DC voltage |
| Signal range | | | 0-10 V DC |
| Resolution | | | 12 Bit (value 0 - 4095) |
| Input impedance | | kΩ | 13.3 |
| Accuracy of actual value | | | |

| | | | |
|---|---|---|---|
| two devices from series | | % | ± 3 , ± 0.12 V |
| Within a single device | | % | ± 2, ± 0.12 V |
| Conversion time, analog/digital | | ms | each CPU cycle |
| Input current | | mA | < 1 |
| Cable length | | m | ≦ 30, screened |

### Transistor outputs

| | | | |
|---|---|---|---|
| Number | | | 4 |
| Rated operational voltage | $U_e$ | V DC | 24 |
| Permissible range | $U_e$ | | 20.4 - 28.8 V DC |
| Residual ripple | | % | 5 |
| Supply current | | mA | Norm./max. 15 |
| Protection against polarity reversal | | | Yes (Caution: A short circuit will occur if a supply voltage of the wrong polarity is applied to the outputs.) |
| Potential isolation | | | from power supply: yes<br>to the memory card: yes<br>to Ethernet: yes<br>From the inputs: yes<br>to control buttons: yes<br>between the outputs: no<br>to expansion devices: yes |
| Rated operational current at signal „1" DC per channel | $I_e$ | A | Max. 0.5 |
| Residual current on 0 signal per channel | | mA | < 0.005 |
| Max. output voltage | | V | 1 (at status 0 per channel)<br>$U = U_e$ - 1 V (signal 1 at $I_e$ = 0.5 A) |
| Short-circuit protection | | | yes, electronic (Q1 - Q4) |
| Short-circuit tripping current for $R_a$ ≦ 10 mΩ | | A | 0.7 ≦ $I_e$ ≦ 1.7 per output<br>depending on number of active channels and their load |
| Total short-circuit current | | A | 6.8 |
| Thermal cutout | | | Yes |
| Max. operating frequency with constant resistive load | | Operations/h | abhängig von der Zykluszeit des Basisgeräts und bei Erweiterungsgeräten auch von deren Übertragungszeit |
| Parallel connection of outputs | | | |
| With resistive load, inductive load with external suppressor circuit, combination within a group | | | Group 1: Q1 to Q4 |
| Number of outputs | max. | | 4 |
| Max. total current | | A | 2 |
| Inductive load to EN 60947-5-1 | | | |
| Without external suppressor circuit | | | |
| DC-13, $T_{0.95}$ = 72 ms, R = 48 Ω, L = 1.15 H | | | |
| Utilization factor | | g | 0.25 |
| Duty factor | | % DF | 100 |
| $T_{0.95}$ = 15 ms, R = 48 Ω, L = 0.24 H | | | |
| Utilization factor | | g | 0.25 |
| Duty factor | | % DF | 100 |
| With external suppressor circuit | | | |
| Utilization factor | | g | 1 |
| Duty factor | | % DF | 100 |
| Max. switching frequency, max. duty factor | | Operations | Depending on the suppressor circuit |

### Ethernet

| | | | |
|---|---|---|---|
| Data transfer rate | | Mbit/s | 10/100 |
| Connections | | | RJ45 plug, 8-pin |
| Cable | | | CAT5 |

## Design verification as per IEC/EN 61439

| | | | |
|---|---|---|---|
| Technical data for design verification | | | |
| Static heat dissipation, non-current-dependent | $P_{vs}$ | W | 2 |
| Operating ambient temperature min. | | °C | -25 |
| Operating ambient temperature max. | | °C | 55 |
| IEC/EN 61439 design verification | | | |
| 10.2 Strength of materials and parts | | | |

| | | | |
|---|---|---|---|
| 10.2.2 Corrosion resistance | | | Meets the product standard's requirements. |
| 10.2.3.1 Verification of thermal stability of enclosures | | | Meets the product standard's requirements. |
| 10.2.3.2 Verification of resistance of insulating materials to normal heat | | | Meets the product standard's requirements. |
| 10.2.3.3 Verification of resistance of insulating materials to abnormal heat and fire due to internal electric effects | | | Meets the product standard's requirements. |
| 10.2.4 Resistance to ultra-violet (UV) radiation | | | Meets the product standard's requirements. |
| 10.2.5 Lifting | | | Does not apply, since the entire switchgear needs to be evaluated. |
| 10.2.6 Mechanical impact | | | Does not apply, since the entire switchgear needs to be evaluated. |
| 10.2.7 Inscriptions | | | Meets the product standard's requirements. |
| 10.3 Degree of protection of ASSEMBLIES | | | Meets the product standard's requirements. |
| 10.4 Clearances and creepage distances | | | Meets the product standard's requirements. |
| 10.5 Protection against electric shock | | | Does not apply, since the entire switchgear needs to be evaluated. |
| 10.6 Incorporation of switching devices and components | | | Does not apply, since the entire switchgear needs to be evaluated. |
| 10.7 Internal electrical circuits and connections | | | Is the panel builder's responsibility. |
| 10.8 Connections for external conductors | | | Is the panel builder's responsibility. |
| 10.9 Insulation properties | | | |
| 10.9.2 Power-frequency electric strength | | | Is the panel builder's responsibility. |
| 10.9.3 Impulse withstand voltage | | | Is the panel builder's responsibility. |
| 10.9.4 Testing of enclosures made of insulating material | | | Is the panel builder's responsibility. |
| 10.10 Temperature rise | | | The panel builder is responsible for the temperature rise calculation. Eaton will provide heat dissipation data for the devices. |
| 10.11 Short-circuit rating | | | Is the panel builder's responsibility. |
| 10.12 Electromagnetic compatibility | | | Is the panel builder's responsibility. |
| 10.13 Mechanical function | | | The device meets the requirements, provided the information in the instruction leaflet (IL) is observed. |

## Technical data ETIM 7.0

| | | | |
|---|---|---|---|
| PLC's (EG000024) / Logic module (EC001417) | | | |
| Electric engineering, automation, process control engineering / Control / Programmable logic control (SPS) / Logic module (ecl@ss10.0.1-27-24-22-16 [AKE539014]) | | | |
| Supply voltage AC 50 Hz | | V | 0 - 0 |
| Supply voltage AC 60 Hz | | V | 0 - 0 |
| Supply voltage DC | | V | 20.4 - 28.8 |
| Voltage type of supply voltage | | | DC |
| Switching current | | A | 0.5 |
| Number of analogue inputs | | | 0 |
| Number of analogue outputs | | | 0 |
| Number of digital inputs | | | 8 |
| Number of digital outputs | | | 4 |
| With relay output | | | No |
| Number of HW-interfaces industrial Ethernet | | | 1 |
| Number of interfaces PROFINET | | | 0 |
| Number of HW-interfaces RS-232 | | | 0 |
| Number of HW-interfaces RS-422 | | | 0 |
| Number of HW-interfaces RS-485 | | | 0 |
| Number of HW-interfaces serial TTY | | | 0 |
| Number of HW-interfaces USB | | | 0 |
| Number of HW-interfaces parallel | | | 0 |
| Number of HW-interfaces Wireless | | | 0 |
| Number of HW-interfaces other | | | 1 |
| With optical interface | | | No |
| Supporting protocol for TCP/IP | | | Yes |
| Supporting protocol for PROFIBUS | | | No |
| Supporting protocol for CAN | | | No |
| Supporting protocol for INTERBUS | | | No |
| Supporting protocol for ASI | | | No |
| Supporting protocol for KNX | | | No |

| | | |
|---|---|---|
| Supporting protocol for MODBUS | | Yes |
| Supporting protocol for Data-Highway | | No |
| Supporting protocol for DeviceNet | | No |
| Supporting protocol for SUCONET | | No |
| Supporting protocol for LON | | No |
| Supporting protocol for PROFINET IO | | No |
| Supporting protocol for PROFINET CBA | | No |
| Supporting protocol for SERCOS | | No |
| Supporting protocol for Foundation Fieldbus | | No |
| Supporting protocol for EtherNet/IP | | No |
| Supporting protocol for AS-Interface Safety at Work | | No |
| Supporting protocol for DeviceNet Safety | | No |
| Supporting protocol for INTERBUS-Safety | | No |
| Supporting protocol for PROFIsafe | | No |
| Supporting protocol for SafetyBUS p | | No |
| Supporting protocol for other bus systems | | No |
| Radio standard Bluetooth | | No |
| Radio standard WLAN 802.11 | | No |
| Radio standard GPRS | | No |
| Radio standard GSM | | No |
| Radio standard UMTS | | No |
| IO link master | | No |
| Redundancy | | No |
| With display | | No |
| Degree of protection (IP) | | IP20 |
| Basic device | | Yes |
| Expandable | | Yes |
| Expansion device | | No |
| With timer | | Yes |
| Rail mounting possible | | Yes |
| Wall mounting/direct mounting | | Yes |
| Front build in possible | | Yes |
| Rack-assembly possible | | No |
| Suitable for safety functions | | No |
| Category according to EN 954-1 | | None |
| SIL according to IEC 61508 | | None |
| Performance level acc. EN ISO 13849-1 | | None |
| Appendant operation agent (Ex ia) | | No |
| Appendant operation agent (Ex ib) | | No |
| Explosion safety category for gas | | None |
| Explosion safety category for dust | | None |
| Width | mm | 71.5 |
| Height | mm | 90 |
| Depth | mm | 58 |

## Approvals

| | | |
|---|---|---|
| UL File No. | | E205091 |
| UL Category Control No. | | NRAQ/7 |
| North America Certification | | UL listed |
| Degree of Protection | | IEC: IP20, UL/CSA Type: - |

## Dimensions

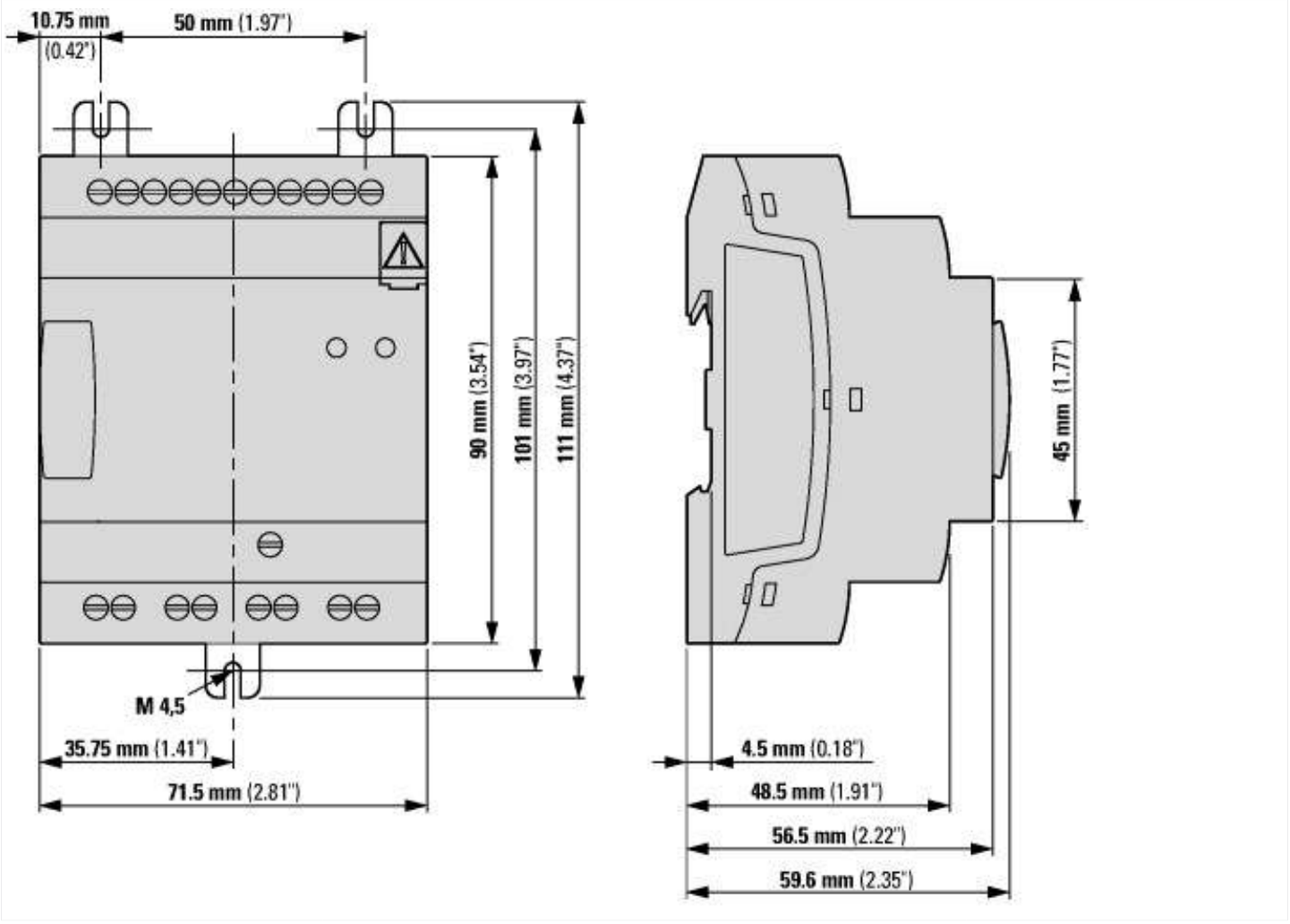


## Additional product information (links)

| | |
|---|---|
| f1=1454&f2=1174&f3=1755;Download Software easySoft V7 | http://applications.eaton.eu/sdlc?LX=11&amp |
| Product overview (WEB) | http://www.eaton.eu/easyE4 |


© 10/2021 by Eaton Industries GmbH