Top View of Assembly

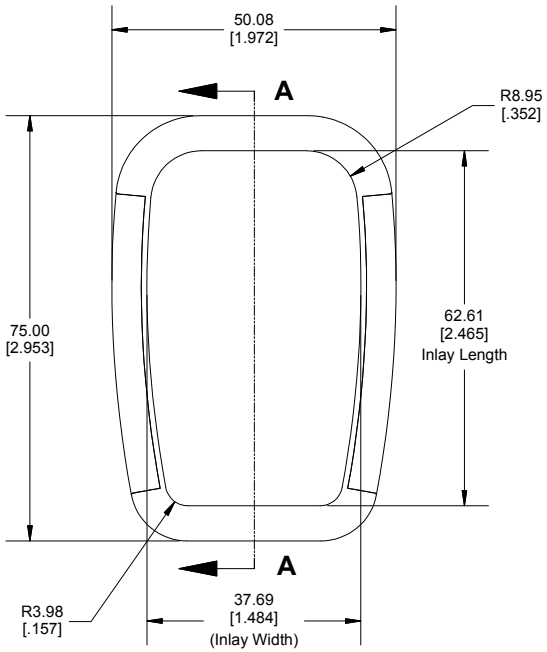

SECTION A-A
(Side View Inside Assembly)

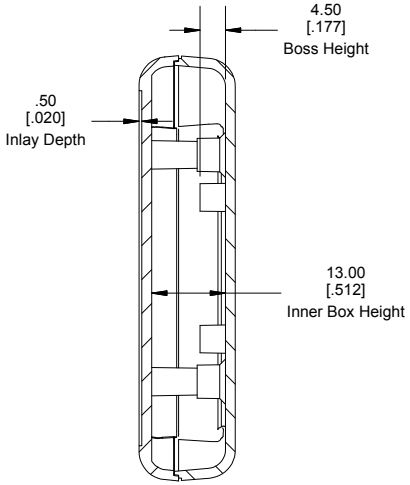



End View of Assembly

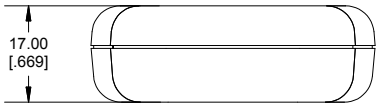

Inside of Bottom Cover

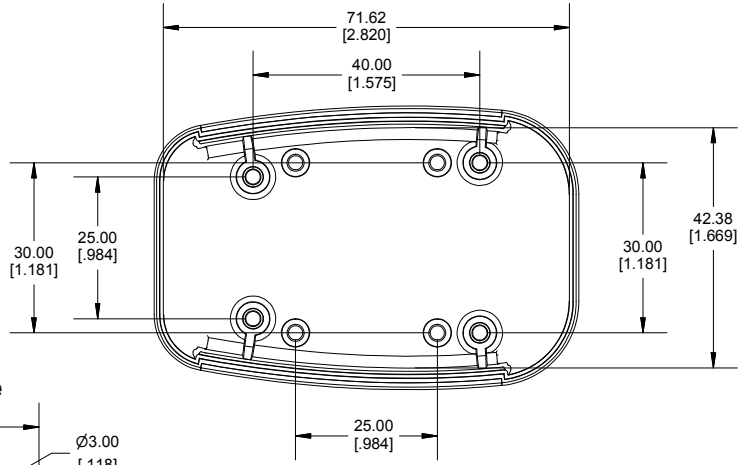

Maximum P.C. Board Size

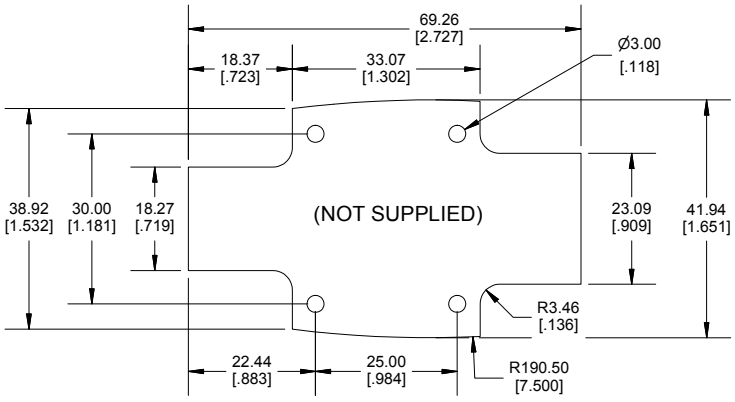

Enclosures can be Factory Modified (Milling, Drilling, Printing etc.)
Contact Factory mjm@hammondmfg.com for quotes
Solid models of this enclosure available in STEP or IGES.
(Part number and text placement/orientation on our products are subject to change, we do not recommend using them as a locating reference for modification purposes)

NOTE
Enclosure molded from GP ABS Plastic.
Purchased assembly includes Top, Bottom and 4 cover screws. (P.C. Board not supplied)
Recommended Cover screw torque -- 2.5 lbf-in (30 cN-m)

PART NUMBER	
1553AA Regular Enclosure	
Black Enclosure/Grey Over-mold	1553AABK
Grey Enclosure/Grey Over-mold	1553AAGY
ACCESSORIES	
Oval Head Cover Screws Self-Tapping (Pkg 100) [#4 X 1/2" (12.7mm)]	SC1553A100 (Silver) SC1553A100BK (Black)
P.C. Board Self Tapping Screw [#4 X 1/4" (6.4mm) Plated]	1593ATS50 (Pkg 50) 1593ATS100 (Pkg 100)
Belt or Pocket Clip	1599CLIP (Black) 1599CLIPGY (Grey)

Dimensions:
mm
[inches]

HAMMOND MANUFACTURING®

1553AA

www.hammondmfg.com