128, av. du Maréchal-de-Lattre-de-Tassigny - 87045 LIMOGES Cedex
Tel. : 0 (+33) 5 55 06 87 87 - Fax : 0 (+33) 5 55 06 88 88
www.legrand.com

Incara™ Pop Up

Cat. No(s) : 6 548 00 to 12 - 6 548 16 to 20/22/23/24/25/27/28 - 6 548 30 to 35/39

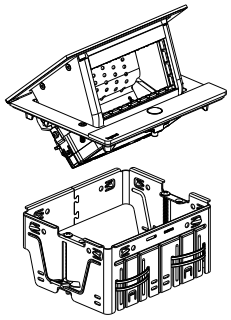
6 548 12

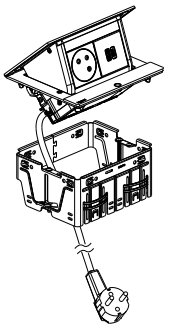
6 548 16/17

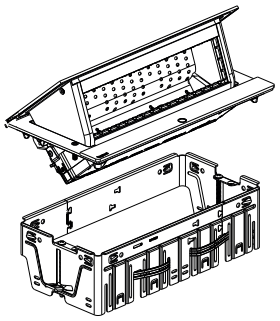
6 548 08/09/10/11

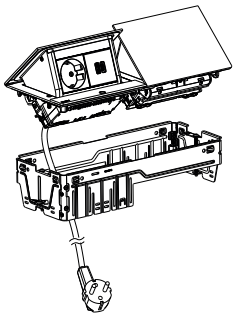
6 548 24/25

1. USE

Incara™ Pop up is a modern and aesthetic solution to bring power and data to the workstation and meeting room.
Available with 4, 8 or 2x4 modules, Incara™ Pop up is available pre-equipped with power functions (power socket and USB charger) or to be equipped with power, data or A/V functions from the Mosaic range. The 4 modules version is also available in IP44 and to be equipped only.

2. RANGE

2.1 Pop up to be equipped

Incara™ Pop Up to be equipped	Finishes			
	Brushed aluminium	White	Black	Aluminium
4 modules	6 548 00	6 548 01	6 548 02	6 548 03
4 modules IP 44	6 548 12	-	-	-
8 modules	6 548 08	6 548 09	6 548 10	6 548 11
2x4 modules	6 548 04	6 548 05	6 548 06	6 548 07

2.2 Pop up equipped

2.2.1 French & Schuko Standards

Incara™ Pop Up equipped with 2 m cord & 2P+E plug			Standards			
			French		Schuko	
			Brushed aluminium	White	Brushed aluminium	White
4 modules	1x 2P+E	1 USB A+C 15 W	6 548 16	6 548 17	6 548 22	6 548 23
		1 USB C 30 W PD	6 548 27	-	6 548 28	-
8 modules	3x 2P+E	1 USB A+C 15 W	6 548 20	-	-	-
2x4 modules	2x 2P+E	2 USB A+C 15W	6 548 18	6 548 19	6 548 24	6 548 25

2.2.2 British Standard

Incara™ Pop Up equipped			British Standard - Brushed aluminium Finishes - equiped with		
			0,5 m cord	2 m cord	
			GST18i3 connector	BS1363 plug	Intersoc R connector
4 modules	1x 2P+E	1 USB A+C 15 W	6 548 31	6 548 30	6 548 32
		1 USB C 30 W PD	-	6 548 39	-
	2x 2P+E	-	6 548 34	6 548 33	6 548 35

3. DIMENSIONS

■ 3.1 Incara™ Pop Up 4 modules

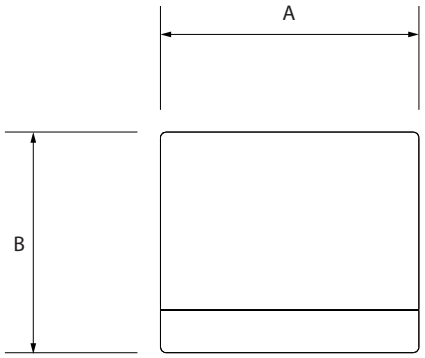

Cat. Nos	A	B
6 548 00/01/02/03/12/16/17/22/23/27/28/30/31/32/33/34/35/39	146	125

■ 3.2 Incara™ Pop Up 8 modules

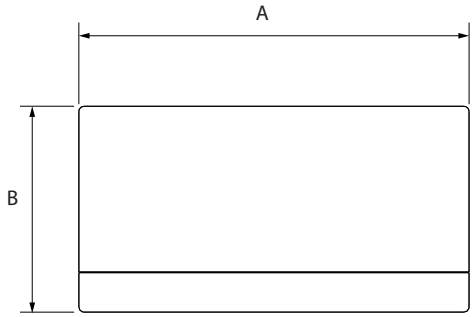

Cat. Nos	A	B
6 548 08/09/10/11/20	236	125

■ 3.3 Incara™ Pop Up 2x4 modules

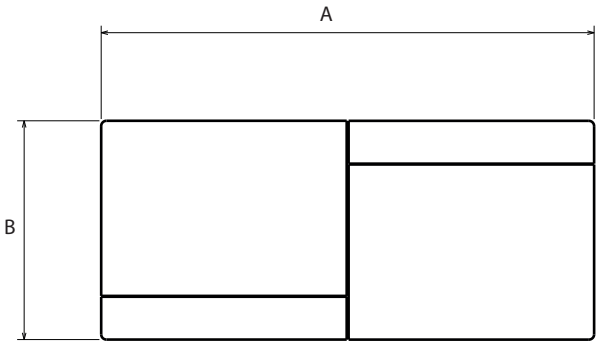

Cat. Nos	A	B
6 548 04/05/06/07/18/19/24/25	282	125

3. DIMENSIONS *(cont.)*

■ 3.3 Incara™ Pop Up closed position

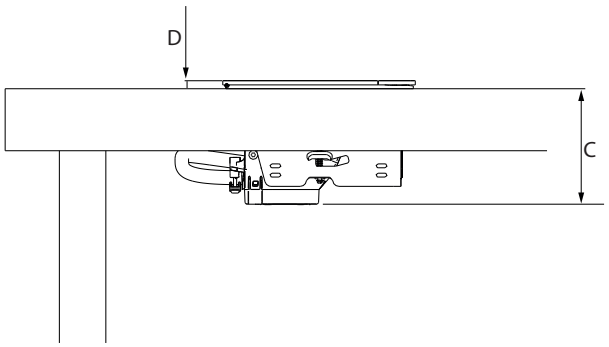

Cat. Nos	C	D
6 548 00/01/02/03/04/05/06/07/08/09/10/11/16/17/18/19/20/22/23/24/25/27/28/30/31/32/33/34/35/39	75	5,7
6 548 12		7,7

■ 3.4 Incara™ Pop Up opened position

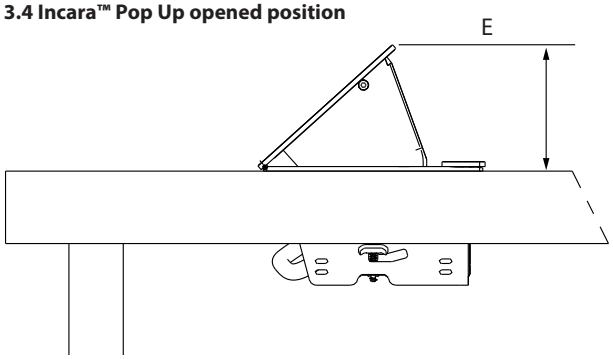

Cat. Nos	E
6 548 00/01/02/03/04/05/06/07/08/09/10/11/12/16/17/18/19/20/22/23/24/25/27/28/30/31/32/33/34/35/39	72

4. INSTALLATION

Must not be fitted on the floor.

■ **4.1 Into the desk**

4.1.1 Drilling dimensions and max cut-out radius in corners

4.1.2.1 Sharp edges cut-out for 4 & 8 modules

	A
6 548 00/01/02/03/12/16/17/22/23/ 6 548 27/28/30/31/32/33/34/35/39	129 mm ± 1
6 548 08/09/10/11/20	219 mm ± 1

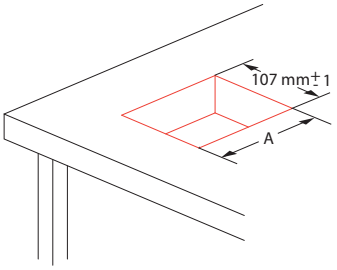

4.1.2.2 Sharp edges cut-out for 2x4 modules

	A
6 548 04/05/06/07/18/19/ 24/25	265 mm ± 1

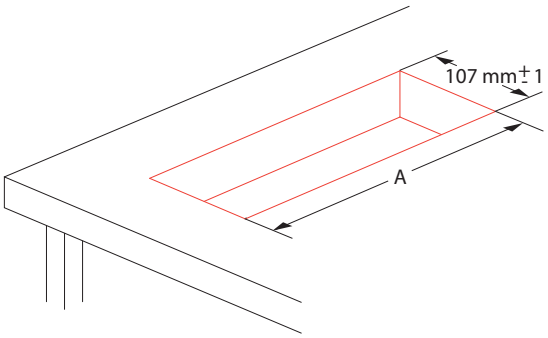

4. iNSTALLATION *(cont.)*

4.1.2.2 CNC machining cut-out

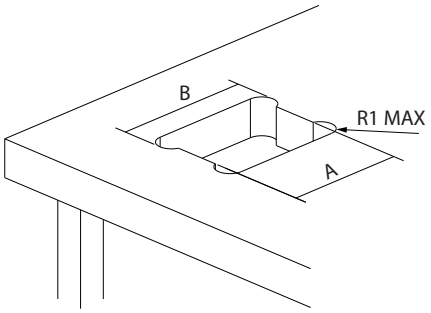

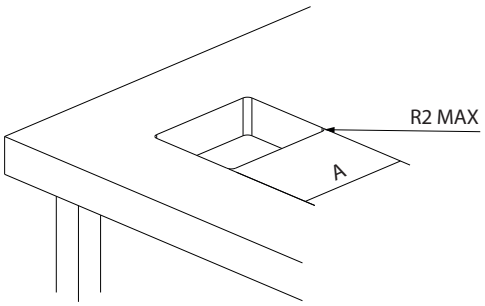

Pop Up	A	B	R1 MAX	R2 MAX
4 modules	129 mm±1	135 maxi	12	6
8 modules	219 mm±1	225 maxi		
2x4 modules	265 mm±1	270 maxi		

4. iNSTALLATION *(cont.)*

4.1.2 Dimensions under desk

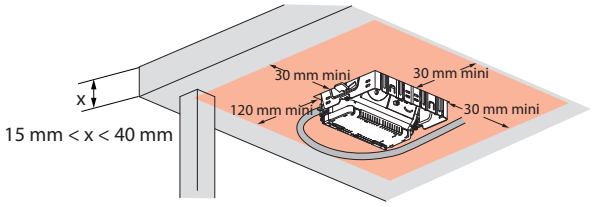

4.1.3 Insertion

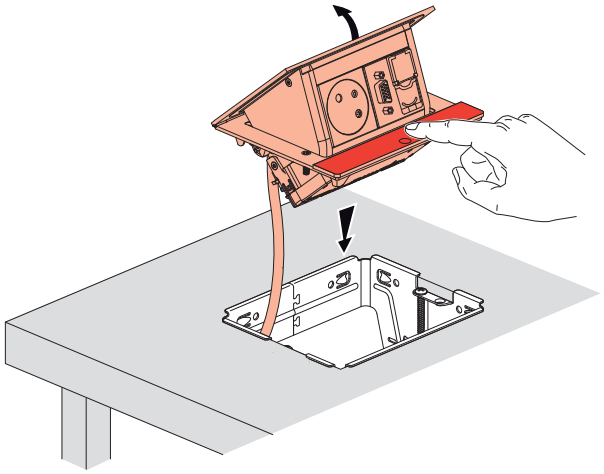

4.1.4 Use

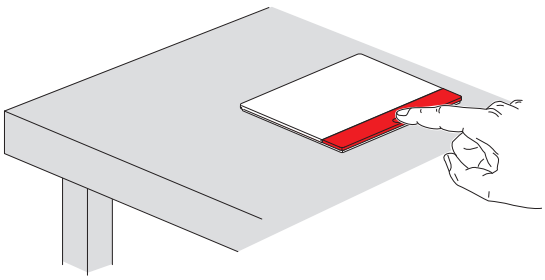

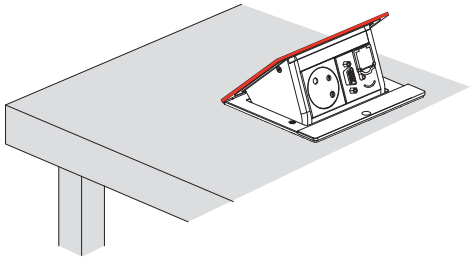

4. iNSTALLATION *(cont.)*

4.1.5 Dimensions under desk

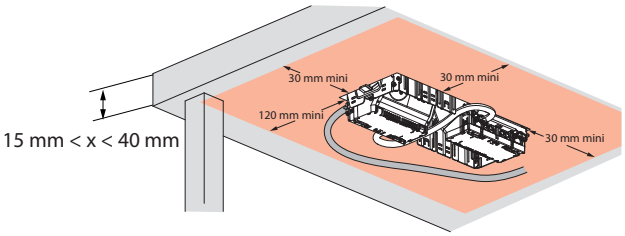

4.1.6 Insertion

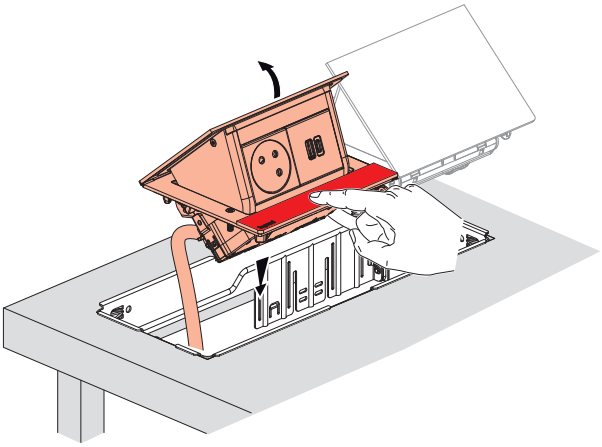

4.1.7 Use

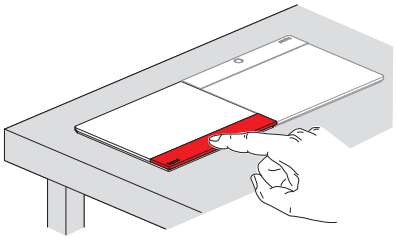

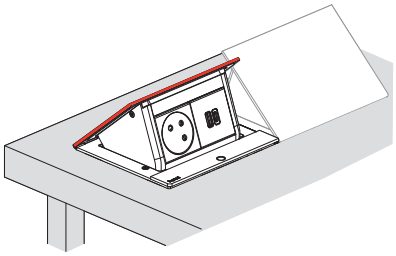

5. TECHNICAL CHARACTERISTICS

■ 5.1 Mechanical characteristics

Resistance to Impact: IK 07 (part on desk)
IK 04 (part under desk)
Degree of protection provided by housings:
IP 44 for nr 6 548 12
IP 20 for the others nr

■ 5.2 Material characteristics

Wiring devices frame: Aluminium, Zamak, ABS
Insulation box: PC-ABS
Mounting frame: Steel

■ 5.3 Electrial characteristics

5.3.1 - 2 P+T sockets characteristics

- Supply voltage: 250V~
- Frequency: 50/60 Hz
- Rated current:
  . for French & Schuko standards = 16A
  . for British standard : individually fused = 5A

5.3.2 USB charger characteristics

refer to technical data sheet of USB charger for cat. nos 0 775 92 0 775 85L & 0 791 85L

5.3.3 Cords characteristics

H05VV-F 3G 1.5mm^2

■ 5.4 Climate characteristics

Operating temperature: from -5°C to +35°C
Storage temperature: from -15°C to +70°C

6. CLEANING

Superficial cleaning with a soft cloth. Do not use abrasive products or detergents.

Caution : Always test before using other special cleaning products

7. STANDARDS AND APPROVALS

Compliant to:

Standards			
French	Schuko	British	
		socket	complete product
NF C61-314 and IEC 60884-1	IEC 60884-1	BS 1363-2	BS 5733

USB charger compliant to IEC 62368-1

Products should be installed by competent persons to the current version of the local wiring regulations.

Please consult Legrand locally for further details.