12000 series

Professional toggle switches - threaded bushing Ø 11,9 (15/32)

Specifications

ELECTRICAL SPECIFICATIONS

- Max. current/voltage rating with resistive load :
  - silver contacts (A-AD2-X780) : 2A 250VAC - 4A 125VAC - 4A 30VDC
  - gold contacts (D) : 200mA 250VAC - 400mA 125VAC

  Peak currents, refer to "Special options".
- Minimum load : AD2-X780-D contacts : 10mA 50mV, 10µA 5V min.
- Initial contact resistance : 10 mΩ max.
- Insulation resistance : 1.000 MΩ min. at 500VDC
- Dielectric strength :
  1.000 Vrms 50 Hz min. between terminals
  2.000 Vrms 50 Hz min. between poles and between terminals and frame
- Contact bounce : 2 ms max.
- Electrical life at full load :

		Number of cycles	
Contacts	Max. current/voltage rating	2 positions	3 positions
A	2A 250VAC - 4A 125VAC - 4A 30VDC	50.000	50.000
AD2 X780	2A 250VAC - 4A 125 VAC - 4A 30VDC (Gold plating : 100mA 30VDC max.)	20.000	20.000
D	200mA 250VAC - 400mA 125VAC	80.000	50.000
	Low level or mechanical life	150.000	100.000

MATERIALS

- Case : diallylphthalate (DAP)
- Actuator : brass, chrome plated
- Bushing : brass, nickel plated
- Housing : brass, nickel plated
- Contacts
  A : silver
  AD2 : gold plated silver (2 microns gold)
  X780 : solid rivet - gold plated silver/nickel alloy
  D : solid gold rivet
  X910 : silver/nickel alloy (for peak currents, see "Special options")
- Terminal seal : epoxy

Note : AD2 and X780 contacts can be used for high level applications. In this case, the gold layer is considered only as a protection against oxidation during storage.
Tin dipped terminals available, see "Special options".

GENERAL SPECIFICATIONS

- Torque :1,50 Nm (1.10 Ft.lb) max. applied between the 2 nuts
- Standard panel thickness : 4,5 mm (.177) max.
- Operating temperature : -40°C to +85°C

RELIABILITY - RUN-IN TEST

Upon request, each individual switch can be submitted to a low level run-in test of 50 or 250 cycles to ensure suitability for special applications requiring a very high level of reliability (military, space, etc.).

AGENCY APPROVALS

CECC 96201-005
CECC 96201-008

Designed to **MIL** specifications

Availability : consult factory for details of approved models.
Marking : to order switches marked CECC, complete appropriate box of ordering format.

Dimensions : first dimensions are in mm while inches are shown as bracketted numbers.

Packaging unit : 2 pole models : 25 pieces - 3 & 4 pole models : 20 pieces.

12000 series

Professional toggle switches - threaded bushing Ø 11,9 (15/32)

Overview

MODEL STRUCTURE

12				

SERIES

Terminals and bushings

1 Solder lug terminals
2 Straight PC terminals

All models with threaded bushing Ø 11,9 (15/32). Bushing Ø 15 (.590), see X822 under "Special options".

Number of poles

4 Double pole
5 Three pole
6 Four pole

Electrical functions

6	ON	-	ON
9	ON	OFF	ON
7	MOM	OFF	MOM
8	ON	OFF	MOM
5	-	ON	MOM
4	ON	ON	ON
	ON	ON	MOM ▲
	MOM	ON	MOM ▲

Function 4
. ▲ Must not have blank in "momentary" box.

Momentary for function 4

1R	ON	ON	MOM
2R	MOM	ON	MOM

Leave blank for other functions.

OPTIONS

Finish

Blank Bright chrome finish
G Matt black finish on bushing, actuator and hardware.

Satin chrome finish, see "Special options".

Fluorescent tip

Blank None
038 White fluorescent tip to lever

Available with matt black finish (G) only.

Special options

Blank No special requirement
X408 Front panel sealing by two O-rings
X822 Bushing Ø 15 (.590)

Other : see foll. pages.

Contact materials

A Silver
AD2 Silver, gold plated (2 micron gold))
D Solid gold rivet

See "Special options" for X780 (solid silver/nickel rivet) and X910 (for peak currents).

Sealing

Blank Epoxy sealed terminals standard
K Front panel sealing by one O-ring and sealing washer

Sealing by two O-rings, see X408, "Special options" box.

Levers

Blank Standard lever
-12 Short lever

Locking levers

-1V 1 locked position
-2V 2 locked positions
-3V 3 locked positions

Other : see foll. pages.

Approvals

CECC

Availability :
Consult factory for details of approved models.

NOTICE : please note that not all combinations of above numbers are available.
Refer to the following pages for further information.

ABOUT THIS SERIES

On the following pages, you will find successively :
- model structure of switches
- options in the same order as in above chart

Sealing boots are available to protect the switches against dust and water. They are presented in section H.

Mounting accessories : standard hardware supplied with all models : 2 hex nuts 14 (.551) across flats and 1 locking ring. Standard and special hardware available are presented in section I.

Security caps are available to prevent inadvertent lever operation. They are presented in section I.

MODEL STRUCTURE

12000 series

Professional toggle switches - threaded bushing Ø 11,9 (15/32)

Solder lug terminals : 12100

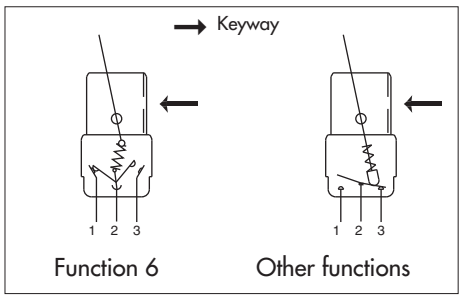

- Epoxy sealed terminals standard

Typical angle of throw (A)	
Function 6	26°
Functions 9, 7, 8, 4	20°
Function 5	12°

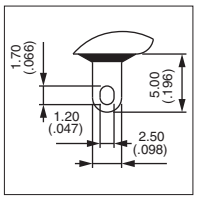

A

MODEL STRUCTURE

Shown with standard lever

Solder lug terminals - double pole



	I	II	III
12146	ON	-	ON
12149	ON	OFF	ON
12147	MOM	OFF	MOM
12148	ON	OFF	MOM
12144*	ON	ON	ON
12144 1R*	ON	ON	MOM
12144 2R*	MOM	ON	MOM
12145	-	ON	MOM

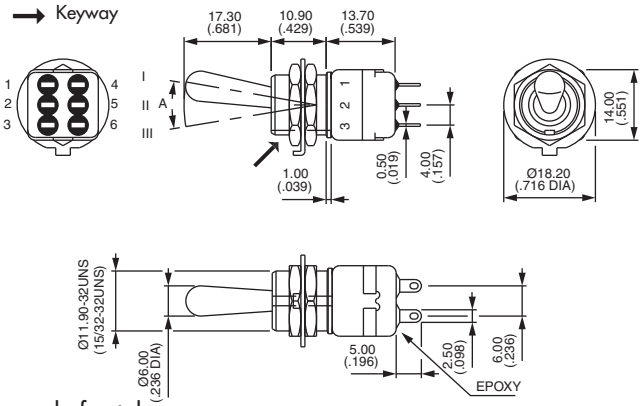

* Function 4 : SP in DP case - connections, see end of catalogue.

Solder lug terminals - three pole



	I	II	III
12156	ON	-	ON
12159	ON	OFF	ON
12157	MOM	OFF	MOM
12158	ON	OFF	MOM

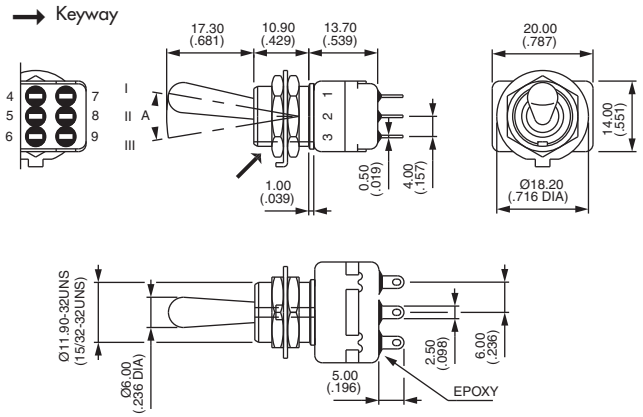

Solder lug terminals - four pole



	I	II	III
12166	ON	-	ON
12169	ON	OFF	ON
12167	MOM	OFF	MOM
12168	ON	OFF	MOM
12164*	ON	ON	ON
12164 1R*	ON	ON	MOM
12164 2R*	MOM	ON	MOM

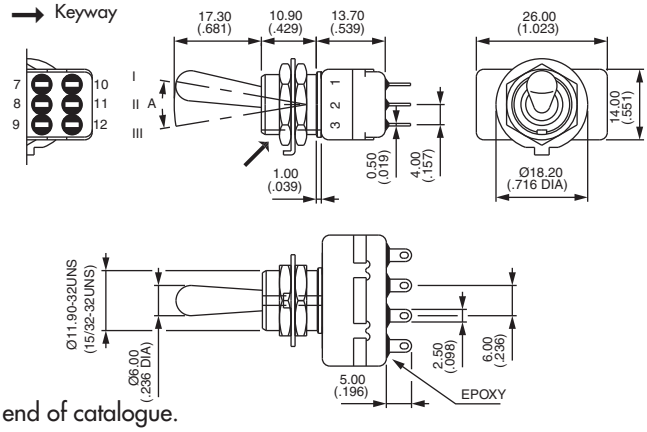

* Function 4 : DP in 4P case - connections, see end of catalogue.

12000 series

Professional toggle switches - threaded bushing Ø 11,9 (15/32)

Straight PC terminals : 12200

MODEL STRUCTURE

A

Straight PC terminals - double pole ▲



	I	II	III
12246	ON	-	ON

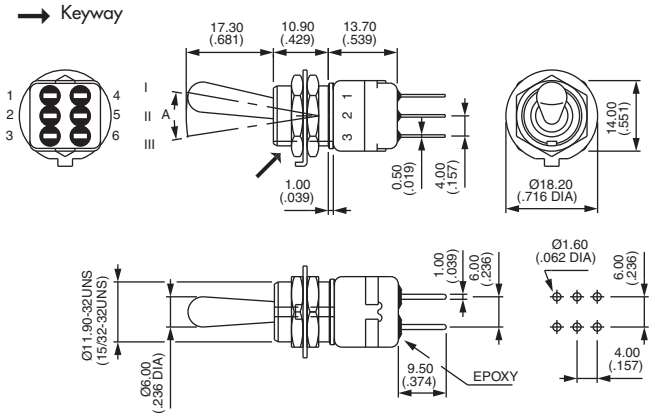

Straight PC terminals - three pole ▲



	I	II	III
12256	ON	-	ON

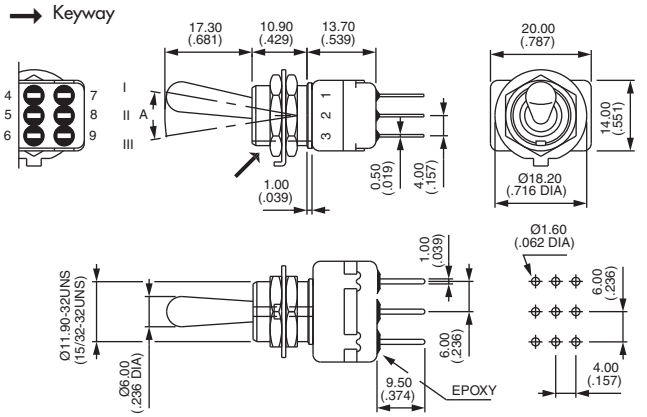

Straight PC terminals - four pole ▲



	I	II	III
12266	ON	-	ON

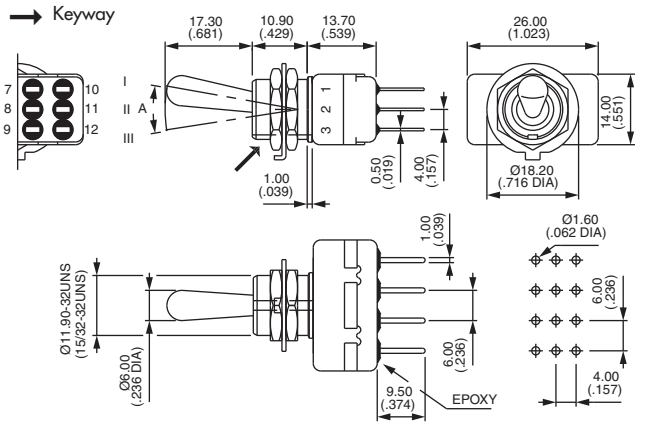

PANEL CUT-OUT

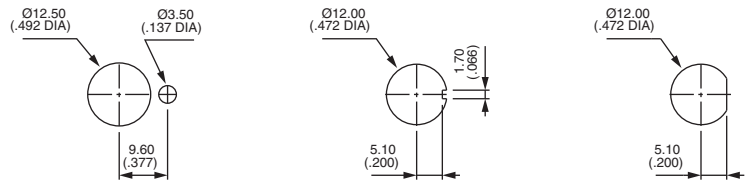

▲ **3,5 mm (.138) short terminals** available for function 6, as well as for functions 9, 7, 8, 4 and 5. On request.

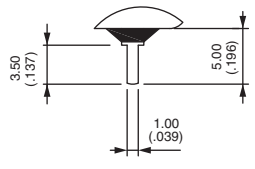

CONTACT MATERIALS

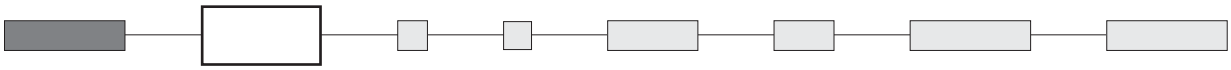

A Silver
AD2 Silver, gold plated (2 micron gold)
D Solid gold rivet (except functions 4 and 5)

See "Special options" for contacts X780 (solid silver/nickel rivet) and contacts X910 (for peak currents).

FINISH

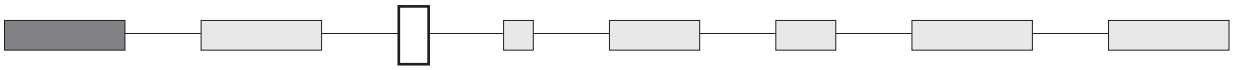

Blank Bright chrome finish
G Matt black finish on bushing, lever and hardware.

For satin chrome finish, see "Special options".

SEALING

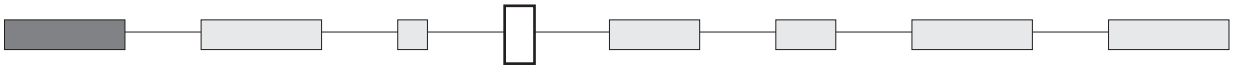

Epoxy sealed terminals are standard.

Blank No sealing except standard.

K Front panel sealing by one O-ring and sealing washer.
Protects the switch against water and dust.
Panel seal withstands 1 bar pressure and remains sealed even when switch is operated.

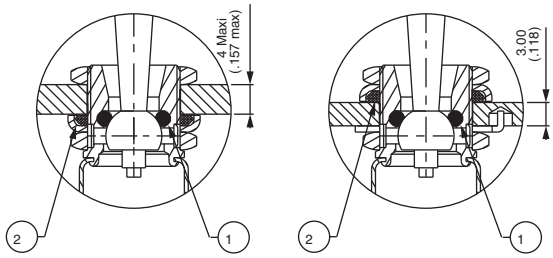

① O-ring ② Sealing washer

Sealing by two O-rings, see X408 under "Special options".
Sealing boots : see section H.

FLUORESCENT TIP

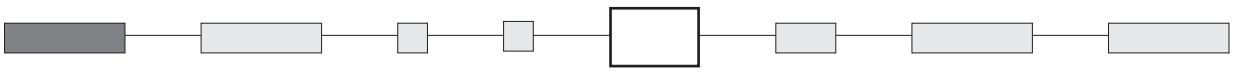

Blank None

038 White fluorescent tip.
Becomes luminous when submitted to ultra-violet rays.

⚠ Available with matt black finish (option G) only.

Standard lever

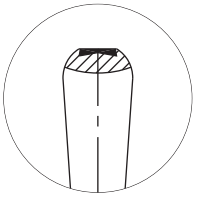

Locking lever

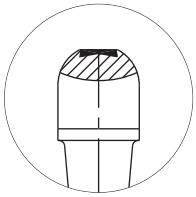

12000 series

Professional toggle switches - threaded bushing Ø 11,9 (15/32)

OPTIONS

A

ACTUATORS

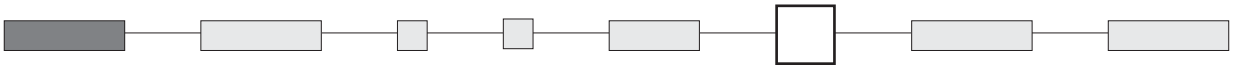

Levers

Dash compulsory before lever code.

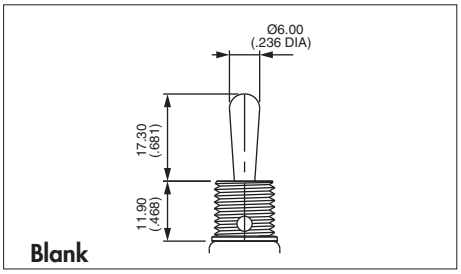

Blank
Standard

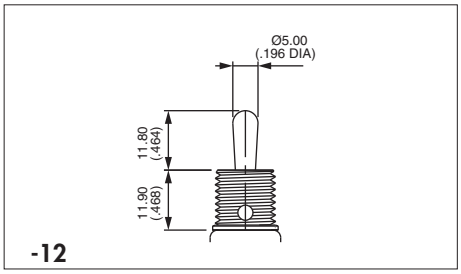

-12
Short lever

Security caps : see section I.

Locking levers

→ Keyway

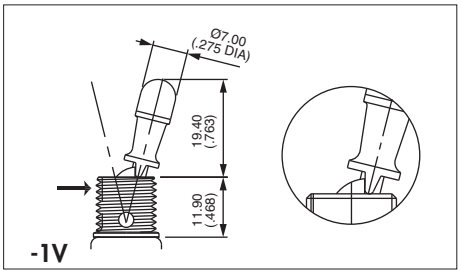

-1V
1 locked position (function 6)
Typical angle of throw : 26°

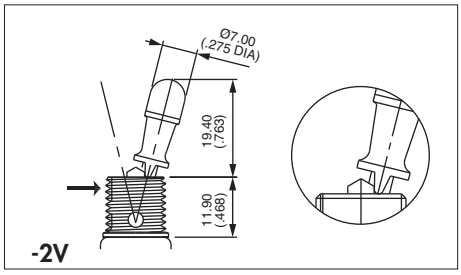

-2V
2 locked positions (function 6)
Typical angle of throw : 26°

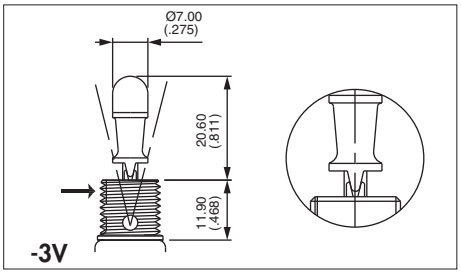

-3V
3 locked positions (functions 9 and 4)
Typical angle of throw : 20°

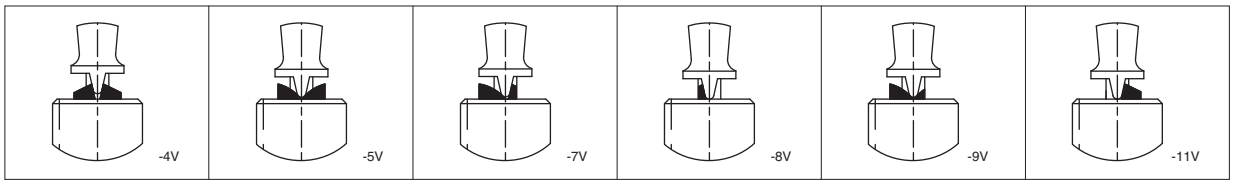

Functions 9 & 4 | Functions 7 & 442R | Functions 8 & 441R | Functions 8, 9, 44 & 441R | Functions 8 & 441R | Functons 8, 9, 44 & 441R

New!

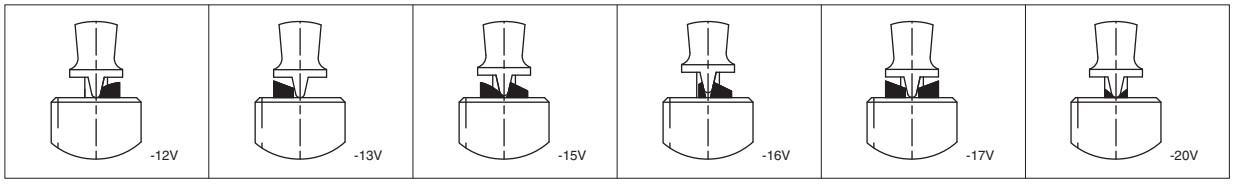

Functions 8 & 441R | Functions 8 & 441R | Functions 8 & 441R | Functions 4 & 9 | Functions 7 & 442R | Functions 9 & 44

Note : -5V and -12V are not true locking levers : no pulling is required before actuation.

SPECIAL OPTIONS

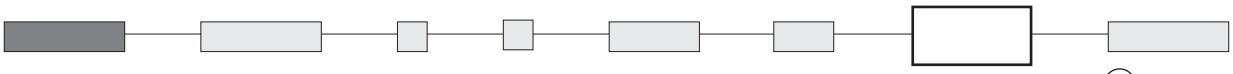

Blank No special requirement.

X408 Front panel sealing by two O-rings. Flatted bushing for precise orientation. Panel thickness : 8 mm (.314) max., 3 mm (.118) min. Protects the switch against water and dust.
Panel seal withstands 1 bar pressure and remains sealed even when switch is operated.

X545 Lever, bushing, housing, nuts and washers **with satin chrome finish**.

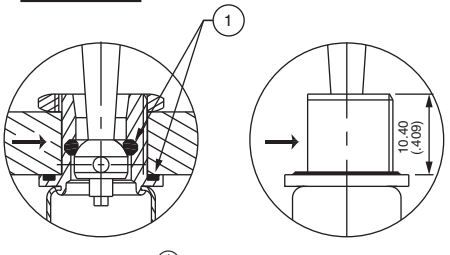

→ Flat ① O-rings

SPECIAL OPTIONS (continued)

X822 Threaded bushing Ø 15 (.590), with double flat
Not available with function 5 or locking levers.
Includes front panel sealing and X780 contact material.

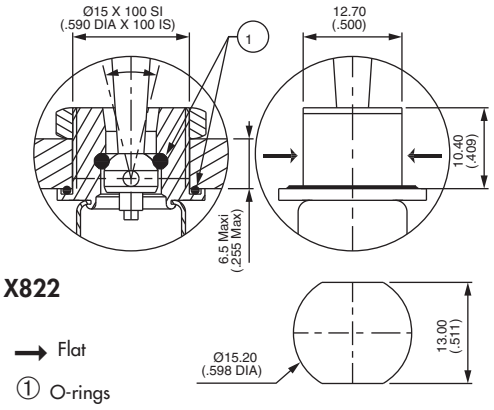

X780 Solid rivet - gold plated silver/nickel alloy contacts
Not available with function 5.

X822

X910 Switches for peak currents

Peak current up to 80A (1 ms) 60VDC - double pole



12146 X910 ON - ON

- Contacts : solid rivet - silver/nickel alloy (AgNi)
- Max. current/voltage rating :
  3/80A (1 ms) 60VDC - 10.000 cycles
  2/30A 250VAC - 10.000 cycles
- Further specifications and dimensions : see previous pages
- General information on peak currents : see end of catalogue.

AGENCY APPROVAL

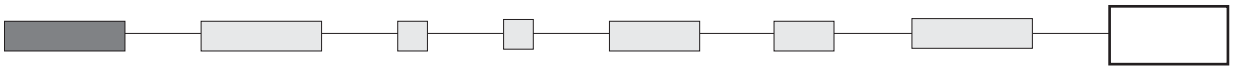

CECC CECC 96201-005 (high level - contacts X780)
CECC 96201-008 (low level - contacts AD2 or D)

Availability : consult factory for details of approved models.

Marking : to order switches marked CECC, complete above box with "CECC".
Blank : no agency approval required.