F68G - Olympian Plus plug-in system
General purpose filter

- Port size: 3/4" ... 1 1/2" (ISO G/ PTF)
- Olympian Plus plug in system
- Effective liquid removal and positive solid particle filtration
- Large filter element area provides minimum pressure drop



Technical features

Medium:
Compressed air only

Maximum operating pressure:
17 bar (246 psi)

Filter element:
40 µm (standard), 5 µm optional

Port sizes:
3/4", 1", 1 1/4" or 1 1/2"

Flow:
See table below

Drain:
Manual or automatic

Automatic drain conditions:
Pressure to close drain:
> 0,3 bar (4.3 psi)
Pressure to open drain:
< 0,2 bar (2.9 psi)
Minimum air flow to close drain:
0,6 dm3/s (1.3 scfm)

Service life indicator:
Available on request

Bowl size:
0,5 litre (17 fluid oz standard);
1 litre (34 fluid oz optional)

Standard compliances:
II 2G Ex h IIC T6 Gb
II 2D Ex h IIIC T85° Db

Ambient/Media temperature:
-20 ... +80°C (-4 ... +176°F)
Air supply must be dry enough to avoid ice formation at temperatures below +2°C (+35°F).

Materials:
Body, yoke and bowl: Aluminium
Liquid level indicator: Pyrex
Element: Sintered plastic
Elastomers: NBR

Technical data - standard models

Symbol	Port size	Size	Drain	Filter element (µm)	Flow *1) (dm3/s)	Weight (kg)	Model
	G3/4	–	Manual	40	160	2,45	F68G-6GN-MR3
	G1	Basic	Manual	40	190	2,33	F68G-8GN-MR3
	G1 1/4	–	Manual	40	200	2,43	F68G-AGN-MR3
	G1 1/2	–	Manual	40	200	2,30	F68G-BGN-MR3
	Without yoke	–	Manual	40			F68G-NNN-MR3
	G3/4	–	Automatic	40	160	2,45	F68G-6GN-AR3
	G1	Basic	Automatic	40	190	2,33	F68G-8GN-AR3
	G1 1/4	–	Automatic	40	200	2,43	F68G-AGN-AR3
	G1 1/2	–	Automatic	40	200	2,30	F68G-BGN-AR3
	Without yoke	–	Automatic	40			F68G-NNN-AR3

*1) Typical flow with inlet pressure 6,3 bar (91 psi) set pressure and 0,5 bar (7 psi) drop from set.

Our policy is one of continued research and development. We therefore reserve the right to amend, without notice, the specifications given in this document. (2002 - 8088i) © 2024 IMI International s.r.o.

Option selector

F68★-★★★-★★★

Version	Substitute
Long bowl (1 litre)	E
Standard bowl (0,5 litre)	G
Port size	**Substitute**
3/4"	6
1"	8
1 1/4"	A
1 1/2"	B
Without yoke	N
Thread	**Substitute**
NPT	A
ISO G parallel (standard)	G
Without yoke (standard)	N
Service life indicator	**Substitute**
Without (standard)	N
Mechanical	D

Element	Substitute
5 µm	1
40 µm (standard)	3
Bowl	**Substitute**
0,5 l with liquid level indicator (standard)	R
1 l with liquid level indicator	U *1)
0,5 l no liquid level indicator	M
1 l no liquid level indicator	C *1)
Drain	**Substitute**
Automatic	A
Manual, spindle type	M

*1) Units with 1 litre bowl are available only with 'E' version only; therefore substitute E at the 4th digit and U or C at the 9th position.

Flow characteristics
Port size 1", 40 µm element

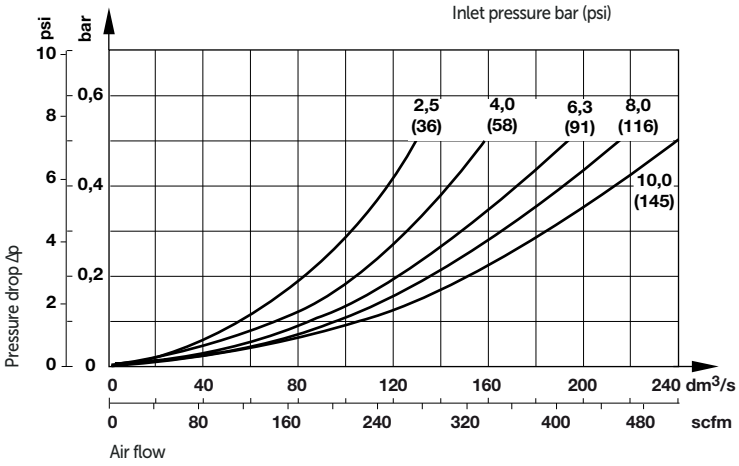

Our policy is one of continued research and development. We therefore reserve the right to amend, without notice, the specifications given in this document. (2002 - 8088i) © 2024 IMI International s.r.o.

Accessories, service kit and gauges



Accessories

Thread	Single yoke  5	Double yoke  5	End connector kit  2	Single yoke non threads  5	3/2 Shut-off valve Threaded inlet only  8	Threaded outlet only  8	Bracket mounting  1
G3/4	Y68A-6GN-N1N	Y68A-6GN-N2N	5524-55	74785-98	T68H-6GB-B2N	T68H-6GC-B2N	18-001-979
G1	Y68A-8GN-N1N	Y68A-8GN-N2N	5524-52		T68H-8GB-B2N	T68H-8GC-B2N	18-001-979
G1 1/4	Y68A-AGN-N1N	Y68A-AGN-N2N	5523-52		T68H-AGB-B2N	T68H-AGC-B2N	18-001-978
G1 1/2	Y68A-BGN-N1N	Y68A-BGN-N2N	5523-93		T68H-BGB-B2N	T68H-BGC-B2N	18-001-972
3/4 PTF	Y68A-6AN-N1N	Y68A-6AN-N2N	5524-53		T68H-6AB-B2N	T68H-6AC-B2N	18-001-979
1 PTF	Y68A-8AN-N1N	Y68A-8AN-N2N	5524-50		T68H-8AB-B2N	T68H-8AC-B2N	18-001-979
1 1/4 PTF	Y68A-AAN-N1N	Y68A-AAN-N2N	5523-50		T68H-AAB-B2N	T68H-AAC-B2N	18-001-978
1 1/2 PTF	Y68A-BAN-N1N	Y68A-BAN-N2N	5523-95		T68H-BAB-B2N	T68H-BAC-B2N	18-001-972

Nut  4	Porting block 
5520-89	18-026-986 (G1/4 & G1/2)

Service kit

	Service kit manual drain 	Service kit automatic drain 
5 µm	F68G-KITM05	F68G-KITA05
40 µm	F68G-KITM40	F68G-KITA40

Our policy is one of continued research and development. We therefore reserve the right to amend, without notice, the specifications given in this document. (2002 - 8088i) © 2024 IMI International s.r.o.

Dimensions

Dimensions in mm
Projection/First angle

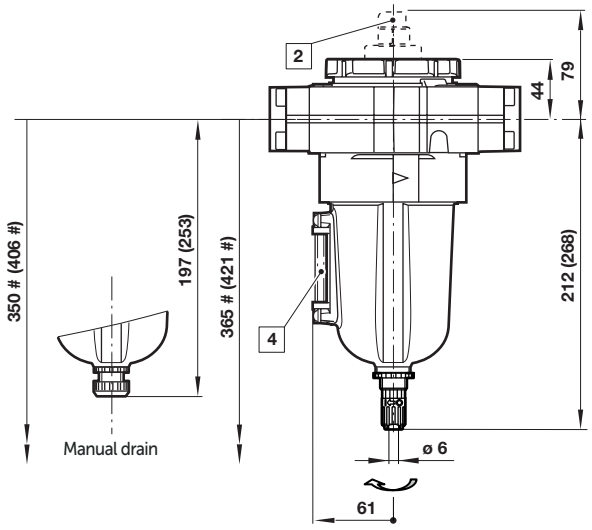

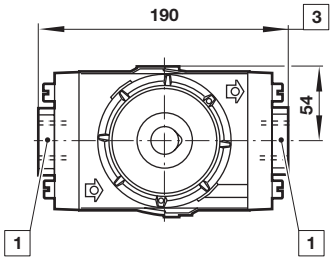

Minimum clearance required to remove bowl
( ) values for 1 litre bowl
1 Main ports 3/4", 1", 1 1/4" or 1 1/2"
2 Service life indicator optional
3 Plus 10 mm for ports 1 1/4" or 1 1/2"
4 Sight glass

Single yoke with bracket

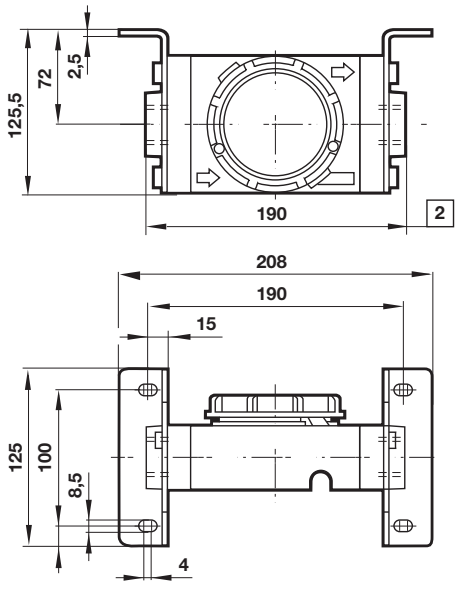

1 For 1 1/4" and 1 1/2" ported yokes add 10 mm

Double yoke with bracket

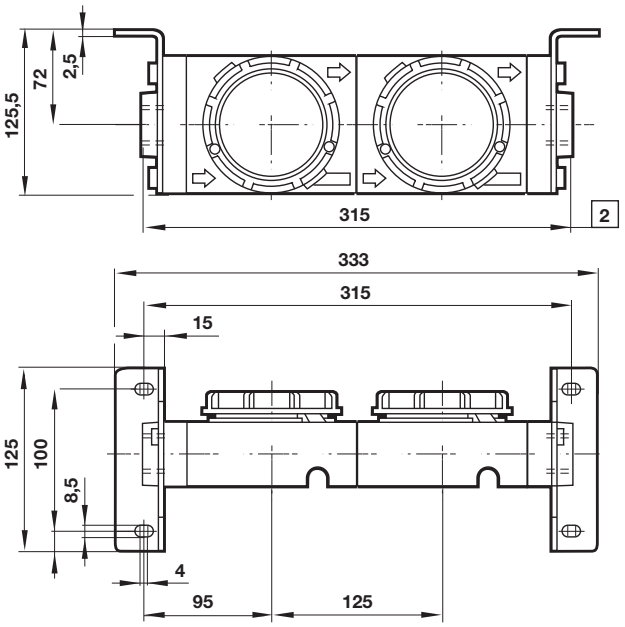

1 For 1 1/4" and 1 1/2" ported yokes add 10 mm

Our policy is one of continued research and development. We therefore reserve the right to amend, without notice, the specifications given in this document. (2002 - 8088i) © 2024 IMI International s.r.o.

3/2 Shut-off valve

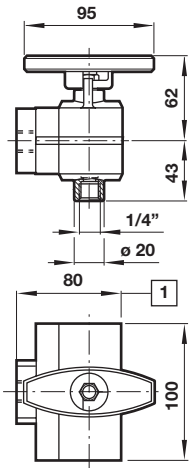

1 For 1 1/2” ported yokes add 5 mm

Porting block

Dimensions in mm
Projection/First angle

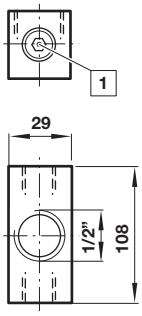

1 Two additional plugged G1/4 ports

Warning

These products are intended for use in industrial compressed air systems only. Do not use these products where pressures and temperatures can exceed those listed under »Technical features/ data«.
Before using these products with fluids other than those specified, for non-industrial applications, life-support systems or other applications not within published specifications, consult IMI Precision Engineering. Through misuse, age, or malfunction, components used in fluid power systems can fail in various modes.

The system designer is warned to consider the failure modes of all component parts used in fluid power systems and to provide adequate safeguards to prevent personal injury or damage to equipment in the event of such failure.
System designers must provide a warning to end users in the system instructional manual if protection against a failure mode cannot be adequately provided.
System designers and end users are cautioned to review specific warnings found in instruction sheets packed and shipped with these products.

Our policy is one of continued research and development. We therefore reserve the right to amend, without notice, the specifications given in this document. (2002 - 8088i) © 2024 IMI International s.r.o.