Product Data Sheet
June 2015
00813-0100-4530, Rev GA

Rosemount® 5300 Series

Superior Performance Guided Wave Radar Level and Interface Transmitter



- Industry leading measurement capability and reliability
- Safety certified to IEC 61508 for SIL2 applications
- Increased plant availability with predictive maintenance and easy troubleshooting
- Reduced instrument count and process penetrations with a multivariable transmitter

EMERSON
Process Management

Taking guided wave radar benefits to the next level

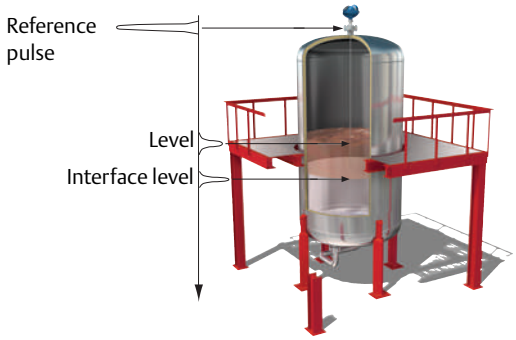

High application flexibility



Measurement principle

Low power, nano-second microwave pulses are guided down a probe submerged in the process media. When a microwave pulse reaches a medium with a different dielectric constant, part of the energy is reflected back to the transmitter.

The transmitter uses the residual wave of the first reflection for measuring the interface level. Part of the wave, which was not reflected at the upper product surface, continues until it is reflected at the lower product surface. The speed of this wave depends fully on the dielectric constant of the upper product.

The time difference between the transmitted and the reflected pulse is converted into a distance, and the total level or interface level is then calculated. The reflection intensity depends on the dielectric constant of the product. The higher the dielectric constant value, the stronger the reflection is.

Guided wave radar technology benefits

- Highly accurate and reliable direct level measurement with no compensation needed for changing process conditions (such as density, conductivity, viscosity, pH, temperature, and pressure)
- No moving parts and no re-calibration result in minimized maintenance
- Handles vapor, dust, turbulence, and foam well
- Suitable for small tanks, difficult tank geometry, internal obstacles, and unaffected by the mechanical design of chambers
- Top down installation minimizes risk for leakages

Contents

Ordering Information 5
Rosemount 5301 and 5302 5
Rosemount 5303 16
Specifications 24
Product Certifications 48
Dimensional Drawings 54

Special 5300 features

Optimized to suit more applications

- Suitable for most liquid and solids level applications and liquid interface applications
- Handles even the most challenging applications reliably, including process vessels, control, and safety systems
- Easy retrofit in existing chambers or available as complete assembly with high quality Rosemount 9901 chambers
- Dynamic Vapor Compensation assures accuracy also in saturated steam

Best performance and uptime

- Unique Direct Switch Technology and Probe End Projection improve capability and reliability particularly in challenging applications
- Single lead probe for long measuring ranges, obstructions and low dielectrics ensures reliability in more applications, such as viscous media
- Smart Galvanic Interface results in a more stable microwave and EMI performance with minimized effects from outside disturbances

Robust design and increased safety

- Heavy-duty unique hardware for extreme temperature and pressures with multiple layers of protection
- EchoLogics and smart software functions provide enhanced ability to keep track of the surface and detect a full vessel situation
- Third party approved for overfill prevention and Safety Integrated System SIL3 suitability
- Electronics and cable connections in separate compartments provides safer handling and improved moisture protection
- Online device verification and reliable detection of high level conditions with the verification reflector

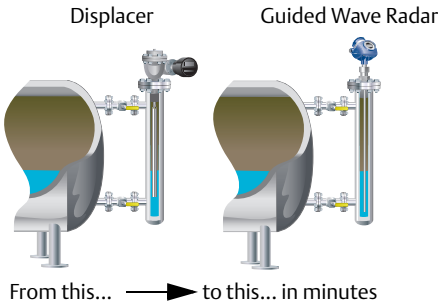

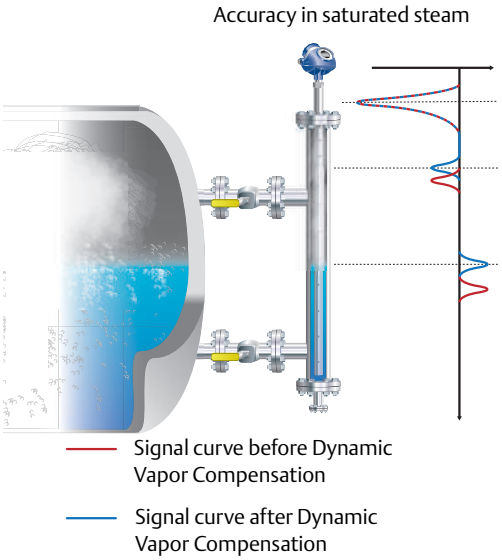

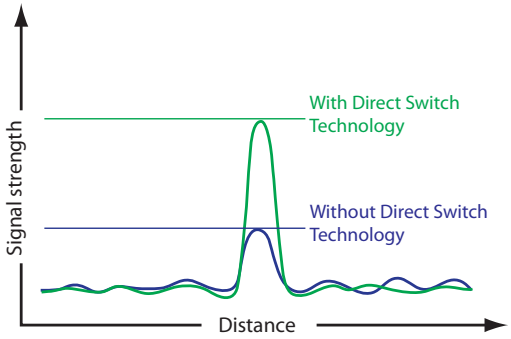

Direct Switch Technology provides a signal that is two to five times stronger than other GWR transmitters'

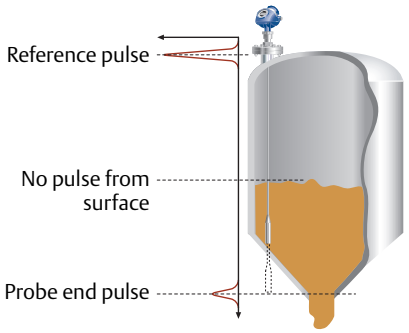

With Probe End Projection, the surface position is calculated if the surface echo becomes unavailable

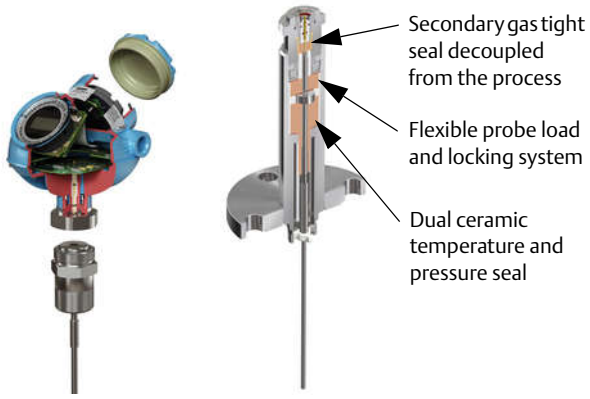

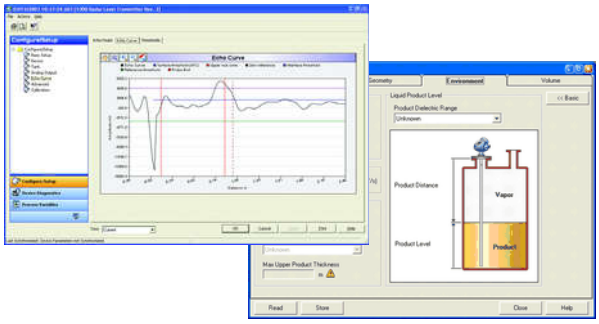

Rosemount Radar Master enables easy configuration and service with wizard, online help, echo curve and logging tools, and much more

Easy installation and plant integration

- Easy upgrade by matching existing tank connections and cut-to-fit probes
- Long lengths of rigid probes for robust measurements become cost-effective and practical to ship, store and install with the segmented probe option (code 4S)
- Multivariable device reduces the number of process penetrations
- Seamless system integration with HART®, FOUNDATION™ fieldbus, Modbus®, or IEC 62591 (*Wireless*HART®) with the Smart Wireless THUM™ Adapter
- Pre-configured or easy configuration in Rosemount Radar Master with a five-step wizard, auto connect, and online help
- Enhanced DD with step-by-step configuration and echo curve capability (HART) in tools such as AMS® Device Manager, and Field Communicator
- DTM™ with echo curve capability for use in FDT®/DTM compatible configuration tools such as PACT*ware*™, Yokogawa FieldMate/PRM

Minimized maintenance reduces cost

- Easy online troubleshooting with user friendly software, utilizing powerful echo curve and logging tools
- Signal Quality Metrics diagnostics detect product build-up on probe to monitor turbulence, boiling, foam, and emulsions
- Predictive maintenance with advanced diagnostics and PlantWeb® alerts
- Modular design for reduced spare parts and easy replacement of the transmitter housing without opening the tank

Rosemount 5301 and 5302 Level and/or Interface in Liquids Ordering Information



Rosemount 5301 and 5302 Guided Wave Radar Level Transmitters provide industry leading measurement capabilities and reliability in liquids. Characteristics include:

- Direct Switch Technology and Probe End Projection to handle low reflective media and long measuring ranges
- Wide range of probe styles, materials, and temperatures and pressures for application flexibility
- HART 4-20 mA, FOUNDATION fieldbus, Modbus, or IEC 62591 (*Wireless*HART) with the Smart Wireless THUM Adapter (see page 24 for details)
- Safety-certified to IEC 61508 (option code QT)
- Advanced Diagnostics (option code D01 or DA1)
- Transmitter verification and high level supervision (option code HL1, HL2, or HL3)

Additional information

Specifications: page 24
Certifications: page 48
Dimensional drawings: page 54

Specification and selection of product materials, options, or components must be made by the purchaser of the equipment. See page 40 for more information on Material Selection.

Table 1. 5301 and 5302 Level and/or Interface in Liquids Ordering Information

The starred options (★) represent the most common options and should be selected for best delivery. The non-starred offerings are subject to additional delivery lead time.

Model	Product description	
5301	Guided Wave Radar Liquid Level or Interface Transmitter (interface available for fully submerged probe)	★
5302	Guided Wave Radar Liquid Level and Interface Transmitter	★
Signal output		
H	4-20 mA with HART communication (see page 24 for details)	★
F	FOUNDATION fieldbus (see page 26 for details)	★
M	RS-485 with Modbus communication (see page 27 for details)	★
U	Rosemount 2410 Tank Hub Connectivity	
Housing material		
A	Polyurethane-covered Aluminum	★
S	Stainless Steel, Grade CF8M (ASTM A743)	
Conduit / cable threads		
1	½ - 14 NPT	★
2	M20 x 1.5 adapter	★
E(1)	M12, 4-pin, Male connector (eurofast®)	★
M(1)	A size Mini, 4-pin, Male connector (minifast®)	★

Table 1. 5301 and 5302 Level and/or Interface in Liquids Ordering Information

The starred options (★) represent the most common options and should be selected for best delivery. The non-starred offerings are subject to additional delivery lead time.

Operating temperature and pressure (see page 29)[2]		**Probe type**	
S	Standard: - 15 to 580 psig @ 302 °F (-1 to 40 bar @ 150 °C)	1A, 2A, 3A, 3B, 4A, 4B, 4S, 5A, and 5B	★
H[3]	High Temperature / High Pressure: 2940 psi @ 752 °F and 5000 psi @ 100 °F (203 bar @ 400 °C and 345 bar @ 38 °C)	3A, 3B, 3V, 4A, 4B, 4S, 4U, 5A, and 5B	★
P[3]	High Pressure: 3500 psi @ 392 °F and 5000 psi @ 100 °F (243 bar @ 200 °C and 345 bar @ 38 °C)	3A, 3B, 4A, 4B, 4S, 5A, and 5B	★
C[3][4]	Cryogenic Temperature: 5000 psi @ -321 °F (345 bar @ -196 °C)	3A, 3B, 4A, 4B, 4S, 5A, 5B (Only SST)	

Material of construction[5]: Process connection / probe		**Probe type**	**Valid operation temperature and pressure**	
1	316L SST (EN 1.4404)	All	S, H, P, C	★
2	Alloy C-276 (UNS N10276). With plate design if flanged version. Up to class 600/PN 63 for HTHP/HP probes.	3A, 3B, 4A	S, H, P	
3	Alloy 400 (UNS N04400). With plate design if flanged version.	3A, 3B, 4A, 5A, 5B	S	
7	PTFE covered probe and flange. With plate design.	4A and 5A	S	
8	PTFE covered probe	4A and 5A	S	
H[6]	Alloy C-276 (UNS N10276) process connection, flange, and probe	3A, 3B, 4A	H, P	
D	Duplex 2205 (UNS S31803) process connection, flange, and probe	4B	S, H, P	

Sealing, o-ring material (consult the factory for other o-ring materials)		
N[7]	None	★
V	Viton® Fluoroelastomer	★
E	Ethylene Propylene (EPDM)	★
K	Kalrez® 6375 Perfluoroelastomer	★
B	Nitrile Butadiene (NBR)	★

Table 1. 5301 and 5302 Level and/or Interface in Liquids Ordering Information

The starred options (★) represent the most common options and should be selected for best delivery. The non-starred offerings are subject to additional delivery lead time.

Probe type		Process connection	Probe lengths	
3B	Coaxial, perforated. For level and interface measurement.	Flange / 1-in.[8], 1½-in., 2- in.[8] Thread	Min: 1 ft 4 in. (0.4 m) Max: 19 ft 8 in. (6 m)	★
3V[9]	Integrated Still Pipe Vapor Probe. For 3-in. chambers and above. Refer to page 14 to specify reference reflector length.	Flange	Min: 2 ft 11 in. (0.9 m) for the short reflector (R1 option) Min: 3 ft 7 in. (1.1 m) for the long reflector (R2 option) Max: 13 ft 1 in. (4 m)	★
4A	Rigid Single Lead (8 mm)	Flange / 1- in.[8], 1½-in., 2- in.[8] Thread / Tri Clamp	Min: 1 ft 4 in. (0.4 m) Max: 9 ft 10 in. (3 m)	★
4B[10]	Rigid Single Lead (13mm)	Flange / 1-in., 1½-in., 2-in. Thread / Tri Clamp	Min: 1 ft 4 in. (0.4 m) Max: 19 ft 8 in. (6 m)	★
4U[9]	Single Rigid Vapor Probe (equipped with a 1½-in. centering disc). For 2-in. chambers. Refer to page 14 to specify reference reflector length.	Flange / 1½-in. Thread	Min: 2 ft 11 in. (0.9 m) for the short reflector (R1 option) Min: 3 ft 7 in. (1.1 m) for the long reflector (R2 option) Max: 7.5 ft (2.3 m)	★
5A[11]	Flexible Single Lead with weight	Flange / 1-in.[8], 1½-in., 2-in.[8] Thread / Tri Clamp	Min: 3 ft 4 in. (1 m) Max: 164 ft (50 m)	★
5B[12]	Flexible Single Lead with chuck	Flange / 1-in.[8], 1½-in., 2-in.[8] Thread / Tri Clamp	Min: 3 ft 4 in. (1 m) Max: 164 ft (50 m)	★
1A[8]	Rigid Twin Lead	Flange / 1½-in., 2-in.[8] Thread	Min: 1 ft 4 in. (0.4 m) Max: 9 ft 10 in. (3 m)	
2A[8]	Flexible Twin Lead with weight	Flange / 1½-in., 2-in.[8] Thread	Min: 3 ft 4 in. (1 m) Max: 164 ft (50 m)	
3A[13]	Coaxial (for level measurement)	Flange / 1-in.[8], 1½-in., 2-in.[8] Thread	Min: 1 ft 4 in. (0.4 m) Max: 19 ft 8 in. (6 m)	
4S	Segmented Rigid Single Lead (13mm)	Flange / 1-in., 1½-in., 2-in. Thread	Min: 1 ft 4 in. (0.4 m) Max: 32 ft 9 in. (10 m)	
Probe length units				
E	English (feet, in.)			★
M	Metric (meters, centimeters)			★
Total probe length[14] (feet/m)				
XXX	0-164 ft or 0-50 m			★
Total probe length[14] (in./cm)				
XX	0-11 in. or 0-99 cm			★

Table 1. 5301 and 5302 Level and/or Interface in Liquids Ordering Information

The starred options (★) represent the most common options and should be selected for best delivery. The non-starred offerings are subject to additional delivery lead time.

Process connection - size / type (consult the factory for other process connections)			
ASME / ANSI flanges[15][16]		**Operating temperature and pressure**	
AA	2 in., 150 lb	S, H, P, C	★
AB	2 in., 300 lb	S, H, P, C	★
AC	2 in., 600 lb	H, P, C	★
AD	2 in., 900 lb	H, P, C	★
BA	3 in., 150 lb	S, H, P, C	★
BB	3 in., 300 lb	S, H, P, C	★
BC	3 in., 600 lb	H, P, C	★
BD	3 in., 900 lb	H, P, C	★
CA	4 in., 150 lb	S, H, P, C	★
CB	4 in., 300 lb	S, H, P, C	★
CC	4 in., 600 lb	H, P, C	★
CD	4 in., 900 lb	H, P, C	★
AE	2 in., 1500 lb	H, P, C	
AF	2 in., 2500 lb	H, P	
AI	2 in., 600 lb, RTJ (Ring Type Joint)	H, P, C	
AJ	2 in., 900 lb, RTJ (Ring Type Joint)	H, P, C	
AK	2 in., 1500 lb, RTJ (Ring Type Joint)	H, P, C	
BE	3 in., 1500 lb	H, P, C	
BF	3 in., 2500 lb	H, P	
BI	3 in., 600 lb, RTJ (Ring Type Joint)	H, P, C	
BJ	3 in., 900 lb, RTJ (Ring Type Joint)	H, P, C	
BK	3 in., 1500 lb, RTJ (Ring Type Joint)	H, P, C	
CE	4 in., 1500 lb	H, P, C	
CF	4 in., 2500 lb	H, P	
CI	4 in., 600 lb, RTJ (Ring Type Joint)	H, P, C	
CJ	4 in., 900 lb, RTJ (Ring Type Joint)	H, P, C	
CK	4 in., 1500 lb, RTJ (Ring Type Joint)	H, P, C	
DA	6 in., 150 lb	S, H, P, C	

Table 1. 5301 and 5302 Level and/or Interface in Liquids Ordering Information

The starred options (★) represent the most common options and should be selected for best delivery. The non-starred offerings are subject to additional delivery lead time.

EN (DIN) flanges[17][18]		Operating temperature and pressure	
HB	DN50, PN40	S, H, P, C	★
HC	DN50, PN63	H, P, C	★
HD	DN50, PN100	H, P, C	★
IA	DN80, PN16	S, H, P, C	★
IB	DN80, PN40	S, H, P, C	★
IC	DN80, PN63	H, P, C	★
ID	DN80, PN100	H, P, C	★
JA	DN100, PN16	S, H, P, C	★
JB	DN100, PN40	S, H, P, C	★
JC	DN100, PN63	H, P, C	★
JD	DN100, PN100	H, P, C	★
HE	DN50, PN160	H, P, C	
HF	DN50, PN250	H, P, C	
HI	DN50, PN40, EN 1092-1 Type E spigot face (DIN 2513 Form V13)	S, H, P, C	
HP	DN50, PN16, EN 1092-1 Type C tongue face (DIN 2512 Form F)	S, H, P, C	
HQ	DN50, PN40, EN 1092-1 Type C tongue face (DIN 2512 Form F)	S, H, P, C	
IE	DN80, PN160	H, P, C	
IF	DN80, PN250	H, P, C	
IH	DN80, PN16, EN 1092-1 Type E spigot face (DIN 2513 Form V13)	S, H, P, C	
II	DN80, PN40, EN 1092-1 Type E spigot face (DIN 2513 Form V13)	S, H, P, C	
IP	DN80, PN16, EN 1092-1 Type C tongue face (DIN 2512 Form F)	S, H, P, C	
IQ	DN80, PN40, EN 1092-1 Type C tongue face (DIN 2512 Form F)	S, H, P, C	
JE	DN100, PN160	H, P, C	
JF	DN100, PN250	H, P, C	
JH	DN100, PN16, EN 1092-1 Type E spigot face (DIN 2513 Form V13)	S, H, P, C	
JI	DN100, PN40, Type E spigot face (DIN 2513 Form V13)	S, H, P, C	
JP	DN100, PN16, EN 1092-1 Type C tongue face (DIN 2512 Form F)	S, H, P, C	
JQ	DN100, PN40, EN 1092-1 Type C tongue face (DIN 2512 Form F)	S, H, P, C	
KA	DN150, PN16	S, H, P, C	

Table 1. 5301 and 5302 Level and/or Interface in Liquids Ordering Information

The starred options (★) represent the most common options and should be selected for best delivery. The non-starred offerings are subject to additional delivery lead time.

JIS flanges[17][19]		**Operating temperature and pressure**	
UA	50A, 10K	S, H, P, C	★
VA	80A, 10K	S, H, P, C	★
XA	100A, 10K	S, H, P, C	★
UB	50A, 20K	S, H, P, C	
VB	80A, 20K	S, H, P, C	
XB	100A, 20K	S, H, P, C	
YA	150A, 10K	S, H, P, C	
YB	150A, 20K	S, H, P, C	
ZA	200A, 10K	S, H, P, C	
ZB	200A, 20K	S, H, P, C	
Threaded connections[15]		**Probe type**	
RA	1½-in. NPT thread	1A, 2A, 3A, 3B, 4A, 4B, 4S, 4U, 5A, 5B	★
RC	2-in. NPT thread	1A, 2A, 3A, 3B, 4A, 4B, 4S, 5A, 5B, standard temperature and pressure	★
RB	1-in. NPT thread	3A, 3B, 4A, 4B, 4S, 5A, 5B, standard temperature and pressure	
SA	1½-in. BSP (G 1½-in.) thread	1A, 2A, 3A, 3B, 4A, 4B, 4S, 4U, 5A, 5B	
SB	1-in. BSP (G 1-in.) thread	3A, 3B, 4A, 4B, 4S, 5A, 5B, standard temperature and pressure	
Tri Clamp fittings		**Probe type**	
FT	1½-in. Tri Clamp	4A, 5A, 5B standard temperature and pressure	
AT	2-in. Tri Clamp	4A, 4B, 5A, 5B standard temperature and pressure	
BT	3-in. Tri Clamp	4A, 4B, 5A, 5B standard temperature and pressure	
CT	4-in. Tri Clamp	4A, 4B, 5A, 5B standard temperature and pressure	

Table 1. 5301 and 5302 Level and/or Interface in Liquids Ordering Information

The starred options (★) represent the most common options and should be selected for best delivery. The non-starred offerings are subject to additional delivery lead time.

Proprietary flanges		
TF	Fisher® - proprietary 316L SST (for 249B, 259B chambers) Torque Tube Flange	★
TT	Fisher - proprietary 316L SST (for 249C chambers) Torque Tube Flange	★
TM	Masoneilan™ - proprietary 316L SST Torque Tube Flange	★
Hazardous locations certifications (see page 48-53)		
NA	No Hazardous Locations Certifications	★
E1(20)	ATEX Flameproof	★
E3(20)	NEPSI Flameproof	★
E5(20)	FM Explosion-proof	★
E6(20)	CSA Explosion-proof	★
E7(20)	IECEx Flameproof	★
I1	ATEX Intrinsic Safety	★
IA(21)	ATEX FISCO Intrinsic Safety	★
I3	NEPSI Intrinsic Safety	★
IC(21)	NEPSI FISCO Intrinsic Safety	★
I5	FM Intrinsic Safety and Non-Incendive	★
IE(21)	FM FISCO Intrinsic Safety	★
I6	CSA Intrinsic Safety	★
IF(21)	CSA FISCO Intrinsic Safety	★
I7	IECEx Intrinsic Safety	★
IG(21)	IECEx FISCO Intrinsic Safety	★
E2	INMETRO Flameproof	
EM(20)	Technical Regulations Customs Union (EAC) Explosion-proof (consult factory for details)	
I2	INMETRO Intrinsic Safety	
IB	INMETRO FISCO Intrinsic Safety	
IM	Technical Regulations Customs Union (EAC) Intrinsic Safety (consult factory for details)	
E4	TIIS Flameproof	
KA(20)	ATEX, FM, CSA Flameproof/Explosion-proof	
KB(20)	ATEX, FM, IECEx Flameproof/Explosion-proof	
KC(20)	ATEX, CSA, IECEx Flameproof/Explosion-proof	
KD(20)	FM, CSA, IECEx Flameproof/Explosion-proof	
KE	ATEX, FM, CSA Intrinsic Safety	
KF	ATEX, FM, IECEx Intrinsic Safety	
KG	ATEX, CSA, IECEx Intrinsic Safety	

Table 1. 5301 and 5302 Level and/or Interface in Liquids Ordering Information

The starred options (★) represent the most common options and should be selected for best delivery. The non-starred offerings are subject to additional delivery lead time.

KH	FM, CSA, IECEx Intrinsic Safety	
KI[21]	FISCO - ATEX, FM, CSA Intrinsic Safety	
KJ[21]	FISCO - ATEX, FM, IECEX Intrinsic Safety	
KK[21]	FISCO - ATEX, CSA, IECEX Intrinsic Safety	
KL[21]	FISCO - FM, CSA, IECEX Intrinsic Safety	
N1	ATEX Type n (consult factory for details)	
N7	IECEx Type n (consult factory for details)	

Options (include with selected model number)

Display		
M1	Integral digital display	★
Hydrostatic testing		
P1[22]	Hydrostatic testing	★
Factory configuration		
C1	Factory configuration (Configuration Data Sheet required with order, available at www.rosemount.com)	★
Alarm limit configuration		
C4	Namur alarm and saturation levels, high alarm	★
C5	Namur alarm and saturation levels, low alarm	★
C8[23]	Low alarm (standard Rosemount alarm and saturation levels)	★
Welding procedure qualification		
Q66	Welding Procedure Qualification Record Documentation	
Special certifications		
Q4	Calibration Data Certification	★
Q8[24]	Material Traceability Certification per EN 10204 3.1	★
QG	GOST Primary Verification Certificate	
Safety certifications		
QS	Prior-use certificate of FMEDA Data. Only available with HART 4-20 mA output (output code H).	★
QT[25]	Safety-certified to IEC 61508 with certificate of FMEDA data. Only available with HART 4-20 mA output (output code H).	★
Materials certification		
N2[26]	NACE® material recommendation per ANSI/NACE MR0175/ISO 15156 and NACE MR0103	★

Table 1. 5301 and 5302 Level and/or Interface in Liquids Ordering Information

The starred options (★) represent the most common options and should be selected for best delivery. The non-starred offerings are subject to additional delivery lead time.

Marine / shipboard approvals[27]			
SBS	American Bureau of Shipping Type Approval (consult factory for details)		
SDN	Det Norske Veritas (DNV) Type Approval (consult factory for details)		
SLL	Lloyd's Register Type Approval (consult factory for details)		
SBV	Bureau Veritas Type Approval (consult factory for details)		
Installation options			
LS	Long stud[28] 9.8 in (250 mm) for flexible single lead probe to prevent contact with wall/nozzle. Standard stud length is 3.9 in (100 mm) for probes 5A and 5B.		★
BR	Mounting Bracket for 1½-in. NPT Process Connection (RA) (see page 68)		
Weight and anchoring options for flexible single probes (probe type 5A)			
W3	Heavy weight (recommended choice for most applications) Weight=2.43 lb (1.10 kg), Length=5.5 in. (140 mm), Diameter=1.5 in. (37.5 mm)		★
W2[29]	Short weight (when measuring close to the probe end) Weight=0.88 lb (0.40 kg. Length=2 in. (50 mm), Diameter=1.5 in. (37.5 mm)		
Transient protection			
T1	Transient Protection Terminal Block. Selectable with HART 4-20 mA output (output code H). Already included in all FOUNDATION fieldbus variations.		★
Diagnostic functionality			
D01	FOUNDATION fieldbus Diagnostics Suite (includes Signal Quality Metrics diagnostics)		★
DA1	HART Diagnostics Suite (includes Signal Quality Metrics diagnostics)		★
Verification reflectors (high level supervision)			
HL1[30]	Verification reflector - 3" to 6" pipe/chamber (High Level Supervision). See page 28 for details. (consult factory for details)		
HL2[30]	Verification reflector - 8" pipe/chamber (High Level Supervision). See page 28 for details. (consult factory for details)		
HL3[30]	Verification reflector - tanks and 10" or wider pipe/chamber (High Level Supervision). See page 28 for details. (consult factory for details)		
Overfill prevention			
U1[31]	WHG Overfill Approval. Only available with HART 4-20 mA output (output code H)		★
Centering discs (see page 47 for size recommendation)		**Outer diameter**	
S2[32]	2-in. Centering disc	1.8 in. (45 mm)	★
S3[32]	3-in. Centering disc	2.7 in. (68 mm)	★
S4[32]	4-in. Centering disc	3.6 in. (92 mm)	★
P2[33]	2-in. Centering disc PTFE	1.8 in. (45 mm)	★
P3[33]	3-in. Centering disc PTFE	2.7 in. (68 mm)	★

Table 1. 5301 and 5302 Level and/or Interface in Liquids Ordering Information

The starred options (★) represent the most common options and should be selected for best delivery. The non-starred offerings are subject to additional delivery lead time.

P4[33]	4-in. Centering disc PTFE	3.6 in. (92 mm)	★
S6[32]	6-in. Centering disc	5.55 in. (141 mm)	
S8[32]	8-in. Centering disc	7.40 in. (188 mm)	
P6[33]	6-in. Centering disc PTFE	5.55 in. (141 mm)	
P8[33]	8-in. Centering disc PTFE	7.40 in. (188 mm)	
Remote housing mounting (see page 69)			
B1	1 m / 3.2 ft. Remote Housing Mounting Cable and Bracket		
B2	2 m / 6.5 ft. Remote Housing Mounting Cable and Bracket		
B3	3 m / 9.8 ft. Remote Housing Mounting Cable and Bracket		
Reference reflectors for dynamic vapor compensation probes (required for probe type 3V and 4U) (See page 33 for reflector length guidelines)			
R1	Short reflector. Length=14 in. (350 mm)		
R2	Long reflector. Length=20 in. (500 mm)		
Consolidate to chamber (see page 45)			
XC[34]	Consolidate to Chamber		
Engineered solutions (see page 45)			
Rxxxx	Engineered Solutions beyond standard model codes. (Consult factory for details)		
Example model string: 5301-H-A-1-S-1-V-1A-M-002-05-AA-I1-M1C1 E-002-05, means 2 ft and 5 in. probe length. M-002-05, means 2.05 m.			

(1) Not available with Flame/Explosion-proof approvals (E1, E3, E5, E6, E7, KA, KB, KC, and KD)

(2) Process seal rating. Final rating depends on flange and O-ring selection. See "Temperature and pressure limits" on page 29-31.

(3) Requires option None for sealing (no O-ring).

(4) Welding Procedure Qualification Record Documentation will be supplied.

(5) For other materials, consult the factory.

(6) Consult the factory for this option.

(7) Requires Operating Temperature and Pressure code H, P, or C.

(8) Only available with Operating Temperature and Pressure code S.

(9) Only available with Operating Temperature and Pressure code H.

(10) Available with Material of Construction codes 1 and D. Consult the factory for other materials.

(11) 0.79 lb (0.36 kg) standard weight for flexible single lead probe. L=5.5 in. (140 mm).
For PTFE covered probes: 2.2 lb (1 kg) standard weight for flexible single lead probe. L=17.1 in. (434 mm).

(12) Extra length for fastening is added in factory.

(13) Requires model 5301.

(14) Probe weight included if applicable. Give the total probe length in feet and inches or meters and centimeters, depending on selected probe length unit. If tank height is unknown, please round up to an even length when ordering. Probes can be cut to exact length in field. Maximum allowable length is determined by process conditions. See "Total probe length" on page 41 for more probe length guidance.

(15) Available in 316L SST. For other materials consult the factory.

(16) Raised face type for SST flanges up to class 1500.

(17) Available in 316L and EN 1.4404. For other materials consult the factory.

(18) Type A flat face for SST flanges up to PN100 and type B2 raised face for SST flanges PN160 and PN250.

(19) Raised face type for SST flanges.

(20) Probes are intrinsically safe.

(21) Requires FOUNDATION fieldbus signal output (U_i parameter listed in "Product Certifications" on page 48).

(22) Available for tank connection with flange.

(23) The standard alarm setting is high.

(24) Certificate includes all pressure retaining wetted parts.

(25) Not available for Dynamic Vapor Compensation probes (type 3V, 4U) or the Verification Reflector options (HL1, HL2, HL3).

(26) For Probe Type 3A, 3B, 4A, 4B, 4S, and 4U, and PTFE-coated 5A.

(27) Only for Housing Material code S and Operating Temperature and Pressure code S.

(28) Not available with PTFE covered probes.

(29) Only for Material of Construction code 1 and 3. For other materials, consult the factory.

(30) Only available with HART 4-20 mA output (code H), standard operating temperature and pressure (code S), material of construction code 1, and flexible single lead probes (probe type 5A or 5B). Not available with option codes QS and QT, and remote housing mounting (option code B1, B2, or B3).

(31) Can not be combined with E2 (INMETRO Flameproof) or I2 (INMETRO Intrinsic Safety).

(32) Available for SST, Alloy C-276, Alloy 400, and Duplex 2205 probes, type 2A, 4A, 4B, 4S, and 5A. Same disc material as probe material. For more information, see "Centering discs" on page 46.

(33) Available for probe types 2A, 4A, 4B, 4S, and 5A. Not available with Operating Temperature and Pressure code H or Material of Construction codes 7 and 8.

(34) Selecting the XC option code on the 5300 Guided Wave Radar and the 9901 Chamber will result in matching, consolidating, configuring, and shipping of the two products in one crate. Note that the flange bolts are only hand-tightened. Long rigid single lead probes (>8 ft/2.5 m) are shipped separately in order to reduce transportation risk damage.

Rosemount 5303 Level for Solids Ordering Information



Rosemount 5303 Guided Wave Radar Level Transmitter provides industry leading measurement capabilities and reliability on solids. Characteristics include:

- Direct Switch Technology and Probe End Projection to handle low reflective media and long measuring ranges
- Measurement independent of dust, moisture and material fluctuations
- HART 4-20 mA, FOUNDATION fieldbus, Modbus, or IEC 62591 (*Wireless*HART) with the Smart Wireless THUM Adapter (see page 24 for details)
- Probes for high physical weight loads (probe type 6A and 6B)
- Long stud available to prevent contact with nozzle (LS option)

Additional information

Specifications: page 24
Certifications: page 48
Dimensional drawings: page 54

Specification and selection of product materials, options, or components must be made by the purchaser of the equipment. See page 40 for more information on Material Selection.

Table 2. 5303 Level for Solids Ordering Information

The starred options (★) represent the most common options and should be selected for best delivery. The non-starred offerings are subject to additional delivery lead time.

Model	Product description		
5303	Guided Wave Solids Level Transmitter		★
Signal output			
H	4-20 mA with HART communication (see page 24 for details)		★
F	FOUNDATION fieldbus (see page 26 for details)		★
M	RS-485 with Modbus communication (see page 27 for details)		★
Housing material			
A	Polyurethane-covered Aluminum		★
S	Stainless Steel, Grade CF8M (ASTM A743)		
Conduit / cable threads			
1	½ - 14 NPT		★
2	M20 x 1.5 adapter		★
E(1)	M12, 4-pin, Male connector (eurofast)		★
M(1)	A size Mini, 4-pin, Male connector (minifast)		★
Operating temperature and pressure (see page 29)(2)		**Probe type**	
S	Standard: - 15 to 580 psig @ 302 °F (-1 to 40 bar @ 150 °C)	All	★
Material of construction(3): process connection / probe		**Probe type**	
1	316L SST (EN 1.4404)	All	★

Table 2. 5303 Level for Solids Ordering Information

The starred options (★) represent the most common options and should be selected for best delivery. The non-starred offerings are subject to additional delivery lead time.

Sealing, o-ring material (consult factory for other o-ring materials)				
V	Viton Fluoroelastomer			★
E	Ethylene Propylene (EPDM)			★
K	Kalrez 6375 Perfluoroelastomer			★
B	Nitrile Butadiene (NBR)			★
Probe type		**Process connection**	**Probe lengths**	
5A[4]	Flexible Single Lead with weight, 4 mm	Flange / 1-in., 1½-in., 2-in. Thread	Min: 3 ft 4 in. (1 m) Max: 115 ft. (35 m)	★
5B[5]	Flexible Single Lead with chuck, 4 mm	Flange / 1-in., 1½-in., 2-in. Thread	Min: 3 ft 4 in. (1 m) Max: 115 ft. (35 m)	★
6A[6]	Flexible Single Lead with weight, 6 mm	Flange / 1-in., 1½-in., 2-in. Thread	Min: 3 ft 4 in. (1 m) Max: 164 ft. (50 m)	★
6B[5]	Flexible Single Lead with chuck, 6 mm	Flange / 1-in., 1½-in., 2-in. Thread	Min: 3 ft 4 in. (1 m) Max: 164 ft. (50 m)	★
Probe length units				
E	English (feet, in.)			★
M	Metric (meters, centimeters)			★
Total probe length[7] (feet/m)				
XXX	0-164 ft or 0-50 m			★
Total probe length[7] (in./cm)				
XX	0-11 in. or 0-99 cm			★
Process connection - size / type (consult the factory for other process connections)				
ASME / ANSI flanges[8]				
AA	2 in., 150 lb			★
AB	2 in., 300 lb			★
BA	3 in., 150 lb			★
BB	3 in., 300 lb			★
CA	4 in., 150 lb			★
CB	4 in., 300 lb			★
DA	6 in., 150 lb			
EN (DIN) flanges[9]				
HB	DN50, PN40			★
IA	DN80, PN16			★
IB	DN80, PN40			★

Table 2. 5303 Level for Solids Ordering Information

The starred options (★) represent the most common options and should be selected for best delivery. The non-starred offerings are subject to additional delivery lead time.

JA	DN100, PN16		★
JB	DN100, PN40		★
HI	DN50, PN40, EN 1092-1 Type E spigot face (DIN 2513 Form V13)		
HP	DN50, PN16, EN 1092-1 Type C tongue face (DIN 2512 Form F)		
HQ	DN50, PN40, EN 1092-1 Type C tongue face (DIN 2512 Form F)		
IH	DN80, PN16, EN 1092-1 Type E spigot face (DIN 2513 Form V13)		
II	DN80, PN40, EN 1092-1 Type E spigot face (DIN 2513 Form V13)		
IP	DN80, PN16, EN 1092-1 Type C tongue face (DIN 2512 Form F)		
IQ	DN80, PN40, EN 1092-1 Type C tongue face (DIN 2512 Form F)		
JH	DN100, PN16, EN 1092-1 Type E spigot face (DIN 2513 Form V13)		
JI	DN100, PN40, Type E spigot face (DIN 2513 Form V13)		
JP	DN100, PN16, EN 1092-1 Type C tongue face (DIN 2512 Form F)		
JQ	DN100, PN40, EN 1092-1 Type C tongue face (DIN 2512 Form F)		
KA	DN150, PN16		
JIS flanges[(9)]			
UA	50A, 10K		★
VA	80A, 10K		★
XA	100A, 10K		★
UB	50A, 20K		
VB	80A, 20K		
XB	100A, 20K		
YA	150A, 10K		
YB	150A, 20K		
ZA	200A, 10K		
ZB	200A, 20K		
Threaded connections[(8)]		**Probe type**	
RA	1½-in. NPT thread	All	★
RC	2-in. NPT thread	All	★
RB	1-in. NPT thread	All	
SA	1½-in. BSP (G 1½-in.) thread	All	
SB	1-in. BSP (G 1-in.) thread	All	

Table 2. 5303 Level for Solids Ordering Information

The starred options (★) represent the most common options and should be selected for best delivery. The non-starred offerings are subject to additional delivery lead time.

Hazardous locations certifications (see page 48-53)		
NA	No Hazardous Locations Certifications	★
E1	ATEX Flameproof	★
E3	NEPSI Flameproof	★
E5	FM Explosion-proof	★
E6	CSA Explosion-proof	★
E7	IECEx Flameproof	★
I1	ATEX Intrinsic Safety	★
IA(10)	ATEX FISCO Intrinsic Safety	★
I3	NEPSI Intrinsic Safety	★
IC(10)	NEPSI FISCO Intrinsic Safety	★
I5	FM Intrinsic Safety and Non-Incendive	★
IE(10)	FM FISCO Intrinsic Safety	★
I6	CSA Intrinsic Safety	★
IF(10)	CSA FISCO Intrinsic Safety	★
I7	IECEx Intrinsic Safety	★
IG(10)	IECEx FISCO Intrinsic Safety	★
E2	INMETRO Flameproof	
EM	Technical Regulations Customs Union (EAC) Explosion-proof (consult factory for details)	
I2	INMETRO Intrinsic Safety	
IB	INMETRO FISCO Intrinsic Safety	
IM	Technical Regulations Customs Union (EAC) Intrinsic Safety (consult factory for details)	
E4	TIIS Flameproof	
KA	ATEX, FM, CSA Flameproof/Explosion-proof	
KB	ATEX, FM, IECEx Flameproof/Explosion-proof	
KC	ATEX, CSA, IECEx Flameproof/Explosion-proof	
KD	FM, CSA, IECEx Flameproof/Explosion-proof	
KE	ATEX, FM, CSA Intrinsic Safety	
KF	ATEX, FM, IECEx Intrinsic Safety	
KG	ATEX, CSA, IECEx Intrinsic Safety	
KH	FM, CSA, IECEx Intrinsic Safety	
KI(10)	FISCO - ATEX, FM, CSA Intrinsic Safety	
KJ(10)	FISCO - ATEX, FM, IECEX Intrinsic Safety	
KK(10)	FISCO - ATEX, CSA, IECEX Intrinsic Safety	

Table 2. 5303 Level for Solids Ordering Information

The starred options (★) represent the most common options and should be selected for best delivery. The non-starred offerings are subject to additional delivery lead time.

KL[10]	FISCO - FM, CSA, IECEX Intrinsic Safety	
N1	ATEX Type n (consult factory for details)	
N7	IECEx Type n (consult factory for details)	

Options (include with selected model number)

Display		
M1	Integral digital display	★
Hydrostatic testing		
P1[11]	Hydrostatic testing	★
Factory configuration		
C1	Factory configuration (Configuration Data Sheet required with order, available at www.rosemount.com)	★
Alarm limit configuration		
C4	Namur alarm and saturation levels, high alarm	★
C5	Namur alarm and saturation levels, low alarm	★
C8	Low alarm[12] (standard Rosemount alarm and saturation levels)	★
Welding procedure qualification		
Q66	Welding Procedure Qualification Record Documentation	
Safety certifications		
QS	Prior-use certificate of FMEDA Data. Only available with HART 4-20 mA output (output code H).	★
QT	Safety-certified to IEC 61508 with certificate of FMEDA data. Only available with HART 4-20 mA output (output code H).	★
Special certifications		
Q4	Calibration Data Certification	★
Q8[13]	Material Traceability Certification per EN 10204 3.1	★
QG	GOST Primary Verification Certificate	
Installation options		
LS	Long stud 9.8 in (250 mm) for flexible single lead probe to prevent contact with wall/nozzle. Standard stud length is 3.9 in (100 mm) for probes 5A and 5B; 5.9 in. (150 mm) for probes 6A and 6B	★
BR	Mounting Bracket for 1½-in. NPT Process Connection (RA) (see page 68)	
Transient protection		
T1	Transient Protection Terminal Block. Selectable with HART 4-20 mA output (output code H). Already included in all FOUNDATION fieldbus variations.	★

Table 2. 5303 Level for Solids Ordering Information

The starred options (★) represent the most common options and should be selected for best delivery. The non-starred offerings are subject to additional delivery lead time.

Diagnostic functionality		
D01	FOUNDATION fieldbus Diagnostics Suite (includes Signal Quality Metrics diagnostics)	★
DA1	HART Diagnostics Suite (includes Signal Quality Metrics diagnostics)	★
Overfill prevention		
U1	WHG Overfill Approval(14). Only available with HART 4-20 mA output (output code H)	★
Remote housing mounting (see page 69)		
B1	1m / 3.2 ft. Remote Housing Mounting Cable and Bracket	
B2	2m / 6.5 ft. Remote Housing Mounting Cable and Bracket	
B3	3m / 9.8 ft. Remote Housing Mounting Cable and Bracket	
Engineered solutions (see page 45)		
Rxxxx	Engineered Solutions beyond standard model codes. (Consult factory for details)	
Example model string: 5303-H-A-1-S-1-V-6A-M-025-50-AA-I1-M1C1. E-025-05, means 25 ft and 5 in. probe length. M-025-50, means 25.5 m.		

(1) Not available with Flame/Explosion-proof approvals (E1, E3, E5, E6, E7, KA, KB, KC, and KD)

(2) Process seal rating. Final rating depends on flange and O-ring selection. See "Temperature and pressure limits" on page 29-31.

(3) For other materials, consult the factory.

(4) 0.79 lb (0.36 kg) standard weight for flexible single lead probe. L=5.5 in. (140 mm).

(5) Extra length for fastening is added in the factory.

(6) 1.2 lb (0.56 kg) standard weight for flexible single lead probe. L=5.5 in. (140 mm).

(7) Probe weight included if applicable. Give the total probe length in feet and inches or meters and centimeters, depending on selected probe length unit. If tank height is unknown, please round up to an even length when ordering. Probes can be cut to exact length in field. Maximum allowable length is determined by process conditions. See "Total probe length" on page 41 for more probe length guidance.

(8) Available in 316L SST. For other materials, consult the factory.

(9) Available in 316L and EN 1.4404. For other materials consult the factory.

(10) Requires FOUNDATION fieldbus signal output (U_i parameter listed in "Product Certifications" on page 48).

(11) Available for tank connection with flange.

(12) The standard alarm setting is high.

(13) Certificate includes all pressure retaining wetted parts.

(14) Can not be combined with E2 (INMETRO Flameproof) or I2 (INMETRO Intrinsic Safety).

Accessories

Table 3. Accessories Ordering Information

The starred options (★) represent the most common options and should be selected for best delivery. The non-starred offerings are subject to additional delivery lead time.

Centering discs (see page 47 for size recommendation)[1][2]		Outer diameter	
03300-1655-0001	Kit, 2-in. Centering Disc, SST, Rigid Single	1.8 in. (45 mm)	★
03300-1655-0002	Kit, 3-in. Centering Disc, SST, Rigid Single	2.7 in. (68 mm)	★
03300-1655-0003	Kit, 4-in. Centering Disc, SST, Rigid Single	3.6 in. (92 mm)	★
03300-1655-0006	Kit, 2-in. Centering Disc, PTFE, Rigid Single	1.8 in. (45 mm)	★
03300-1655-0007	Kit, 3-in. Centering Disc, PTFE, Rigid Single	2.7 in. (68 mm)	★
03300-1655-0008	Kit, 4-in. Centering Disc, PTFE, Rigid Single	3.6 in. (92 mm)	★
03300-1655-1001	Kit, 2-in. Centering Disc, SST, Single / Twin Flex Lead	1.8 in. (45 mm)	★
03300-1655-1002	Kit, 3-in. Centering Disc, SST, Single / Twin Flex Lead	2.7 in. (68 mm)	★
03300-1655-1003	Kit, 4-in. Centering Disc, SST, Single / Twin Flex Lead	3.6 in. (92 mm)	★
03300-1655-1006	Kit, 2-in. Centering Disc, PTFE, Single / Twin Flex Lead	1.8 in. (45 mm)	★
03300-1655-1007	Kit, 3-in. Centering Disc, PTFE, Single / Twin Flex Lead	2.7 in. (68 mm)	★
03300-1655-1008	Kit, 4-in. Centering Disc, PTFE, Single / Twin Flex Lead	3.6 in. (92 mm)	★
03300-1655-0004	Kit, 6-in. Centering Disc, SST, Rigid Single	5.55 in. (141 mm)	
03300-1655-0005	Kit, 8-in. Centering Disc, SST, Rigid Single	7.40 in. (188 mm)	
03300-1655-0009	Kit, 6-in. Centering Disc, PTFE, Rigid Single	5.55 in. (141 mm)	
03300-1655-0010	Kit, 8-in. Centering Disc, PTFE, Rigid Single	7.40 in. (188 mm)	
03300-1655-1004	Kit, 6-in. Centering Disc, SST, Single / Twin Flex Lead	5.55 in. (141 mm)	
03300-1655-1005	Kit, 8-in. Centering Disc, SST, Single / Twin Flex Lead	7.40 in. (188 mm)	
03300-1655-1009	Kit, 6-in. Centering Disc, PTFE, Single / Twin Flex Lead	5.55 in. (141 mm)	
03300-1655-1010	Kit, 8-in. Centering Disc, PTFE, Single / Twin Flex Lead	7.40 in. (188 mm)	
Centering discs for mounting between segments (probe type 4S only)		**Outer diameter**	
03300-1656-1002	2-in. Centering Disc (1 pc), PTFE, Segmented Rigid Single Lead	1.8 in. (45 mm)	
03300-1656-1003	3-in. Centering Disc (1 pc), PTFE, Segmented Rigid Single Lead	2.7 in. (68 mm)	
03300-1656-1004	4-in. Centering Disc (1 pc), PTFE, Segmented Rigid Single Lead	3.6 in. (92 mm)	
03300-1656-1006	6-in. Centering Disc (1 pc), PTFE, Segmented Rigid Single Lead	5.55 in. (141 mm)	
03300-1656-1008	8-in. Centering Disc (1 pc), PTFE, Segmented Rigid Single Lead	7.40 in. (188 mm)	
03300-1656-3002	2-in. Centering Disc (3 pcs), PTFE, Segmented Rigid Single Lead	1.8 in. (45 mm)	
03300-1656-3003	3-in. Centering Disc (3 pcs), PTFE, Segmented Rigid Single Lead	2.7 in. (68 mm)	
03300-1656-3004	4-in. Centering Disc (3 pcs), PTFE, Segmented Rigid Single Lead	3.6 in. (92 mm)	
03300-1656-3006	6-in. Centering Disc (3 pcs), PTFE, Segmented Rigid Single Lead	5.55 in. (141 mm)	
03300-1656-3008	8-in. Centering Disc (3 pcs), PTFE, Segmented Rigid Single Lead	7.40 in. (188 mm)	
03300-1656-5002	2-in. Centering Disc (5 pcs), PTFE, Segmented Rigid Single Lead	1.8 in. (45 mm)	

Table 3. Accessories Ordering Information

The starred options (★) represent the most common options and should be selected for best delivery. The non-starred offerings are subject to additional delivery lead time.

03300-1656-5003	3-in. Centering Disc (5 pcs), PTFE, Segmented Rigid Single Lead	2.7 in. (68 mm)	
03300-1656-5004	4-in. Centering Disc (5 pcs), PTFE, Segmented Rigid Single Lead	3.6 in. (92 mm)	
03300-1656-5006	6-in. Centering Disc (5 pcs), PTFE, Segmented Rigid Single Lead	5.55 in. (141 mm)	
03300-1656-5008	8-in. Centering Disc (5 pcs), PTFE, Segmented Rigid Single Lead	7.40 in. (188 mm)	
Segmented rigid single lead probe spare part kit			
03300-0050-0001	15.2 in. / 385 mm Segment for Top connection (1 pc)		
03300-0050-0002	31.5 in. / 800 mm Segment (1 pc)		
03300-0050-0003	31.5 in. / 800 mm Segment (3 pcs)		
03300-0050-0004	31.5 in. / 800 mm Segment (5 pcs)		
03300-0050-0005	31.5 in. / 800 mm Segment (12 pcs)		
Vented flanges[(3)]			
03300-1812-0092	Fisher 249B, 259B		
03300-1812-0093	Fisher 249C		
03300-1812-0091	Masoneilan		
Flushing connection rings			
DP0002-2111-S6	2 in. ANSI, ¼ in. NPT connection		
DP0002-3111-S6	3 in. ANSI, ¼ in. NPT connection		
DP0002-4111-S6	4 in. ANSI, ¼ in. NPT connection		
DP0002-5111-S6	DN50, ¼ in. NPT connection		
DP0002-8111-S6	DN80, ¼ in. NPT connection		
HART modem and cables			
03300-7004-0001	MACTek® VIATOR® HART Modem and cables (RS232 connection)		★
03300-7004-0002	MACTek VIATOR HART Modem and cables (USB connection)		★
Remote housing mounting spare part kit			
03300-7006-0001	1 m / 3.2 ft. Remote Housing Mounting Cable and Bracket		
03300-7006-0002	2 m / 6.5 ft. Remote Housing Mounting Cable and Bracket		
03300-7006-0003	3 m / 9.8 ft. Remote Housing Mounting Cable and Bracket		
Verification reflector (high level supervision) spare part kit (requires 5300 firmware version 2.H0 or later)			
05300-7200-0001	For 3” to 8” pipe/chamber (inner diameter)		
05300-7200-0002	For tanks or 10” pipe/chamber (inner diameter) or wider		

(1) If a centering disc is required for a flanged probe, the centering disc can be ordered with options Sx or Px on page 13 in the model code. If a centering disc is required for a threaded connection, or as a spare part, it should be ordered using the item numbers listed below.

(2) To order a centering disc in a different material consult the factory.

(3) 1-½ in. NPT threaded connection (RA) is required.

Specifications

Functional specifications

General

Field of applications
Liquids and semi-liquids level and/or liquid/liquid interfaces or solids level

- Model 5301, for liquid level or submerged interface measurements
- Model 5302, for liquid level and interface measurements
- Model 5303, for solid level measurements

Measurement principle
Time Domain Reflectometry (TDR)
(See "Measurement principle" on page 2 for a description of how it works)

Microwave output power
Nominal 300 µW, Max. 45 mW

Telecommunication (FCC and R&TTE)
FCC part 15 (1998) subpart B and R&TTE (EU directive 99/5/EC). Considered to be an unintentional radiator under the Part 15 rules

Humidity
0 - 100% Relative Humidity

Start-up time
< 40 s

4-20 mA HART (output option code H)

Output
Two-wire, 4–20 mA. Digital process variable is superimposed on 4–20 mA signal, and available to any host that conforms to the HART protocol. The HART signal can be used in a multidrop mode.

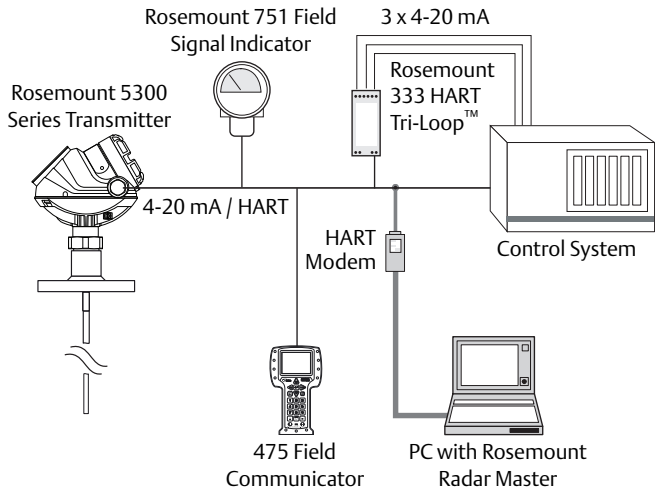

Signal wiring
Recommended output cabling is twisted shielded pairs, 24-12 AWG

HART Tri-Loop
By sending the digital HART signal to the optional HART Tri-Loop, it is possible to have up to three additional 4–20 mA analog signals. See the Rosemount 333 HART Tri-Loop Product Data Sheet (document number 00813-0100-4754) for additional information.



Smart Wireless THUM Adapter
The optional Smart Wireless THUM Adapter can be mounted directly on the transmitter or by using a remote mounting kit. IEC 62591 (*Wireless*HART) enables access to multivariable data and diagnostics, and adds wireless to almost any measurement point.



See the Rosemount Smart Wireless THUM adapter Product Data Sheet (document number 00813-0100-4075) and Smart Wireless THUM Adapter for Rosemount Process Level Transmitter Applications (document number 00840-0100-4026).

External power supply[1]

Approval type	Input voltage (U_i)
None	16 - 42.4 Vdc
Non-sparking/Energy Limited	16 - 42.4 Vdc
Intrinsically Safe	16 - 30 Vdc
Explosion-proof/Flameproof	20 - 42.4 Vdc

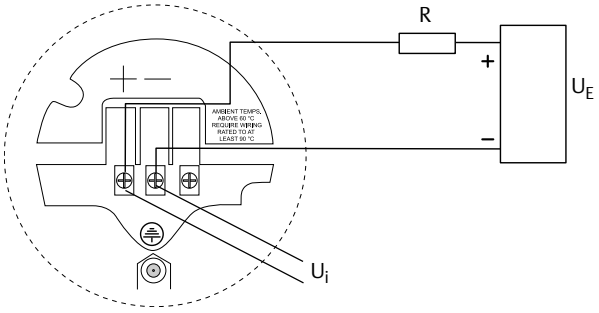

R = Load Resistance (Ω)
U_E = External Power Supply Voltage (Vdc)
U_i = Input Voltage (Vdc)

For Explosion-proof/Flameproof installations the Rosemount 5300 Series Transmitters have a built-in barrier; no external barrier needed.[2]

When a Smart Wireless THUM Adapter is fitted, it adds a maximum drop of 2.5 Vdc in the connected loop.

Minimum input voltage (U_i) at different currents

Approval type	Current	
	3.75 mA	21.75 mA
Non-hazardous installations and Intrinsically Safe installations	16 Vdc	11 Vdc
Explosion-proof/Flameproof installations	20 Vdc	15.5 Vdc

IS parameters

See "Product Certifications" on page 48

Signal on alarm

	High	Low
Standard	21.75 mA	3.75 mA
Namur NE43	22.50 mA	3.60 mA

Saturation levels

	High	Low
Standard	20.8 mA	3.9 mA
Namur NE43	20.5 mA	3.8 mA

Load limitations

Maximum loop resistance is determined by the voltage level of the external power supply, as described by:

Non-Hazardous and Non-sparking/energy limited Installations

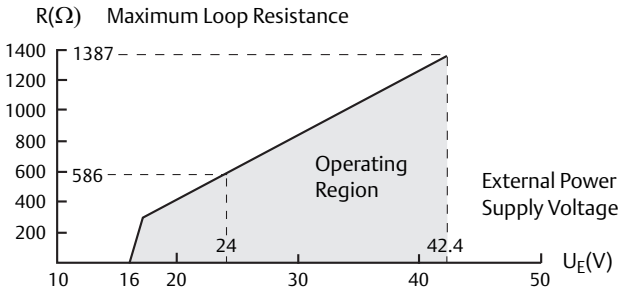

Intrinsically Safe Installations

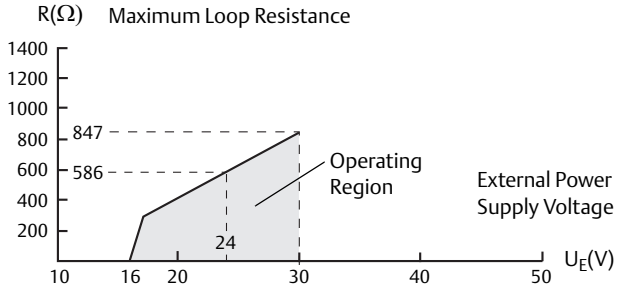

Explosion-proof/Flameproof (Ex d) Installations

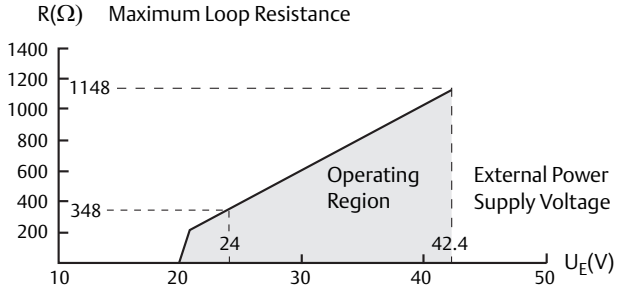

Note

For the Ex d case, the diagram is only valid if the HART load resistance is at the + side and if the - side is grounded, otherwise the loop resistance value is limited to 435 Ω.

(1) Reverse polarity protection.

(2) An external galvanic isolator is always recommended to be used for Flameproof/Explosion-proof installations.

FOUNDATION fieldbus (output option code F)

Output

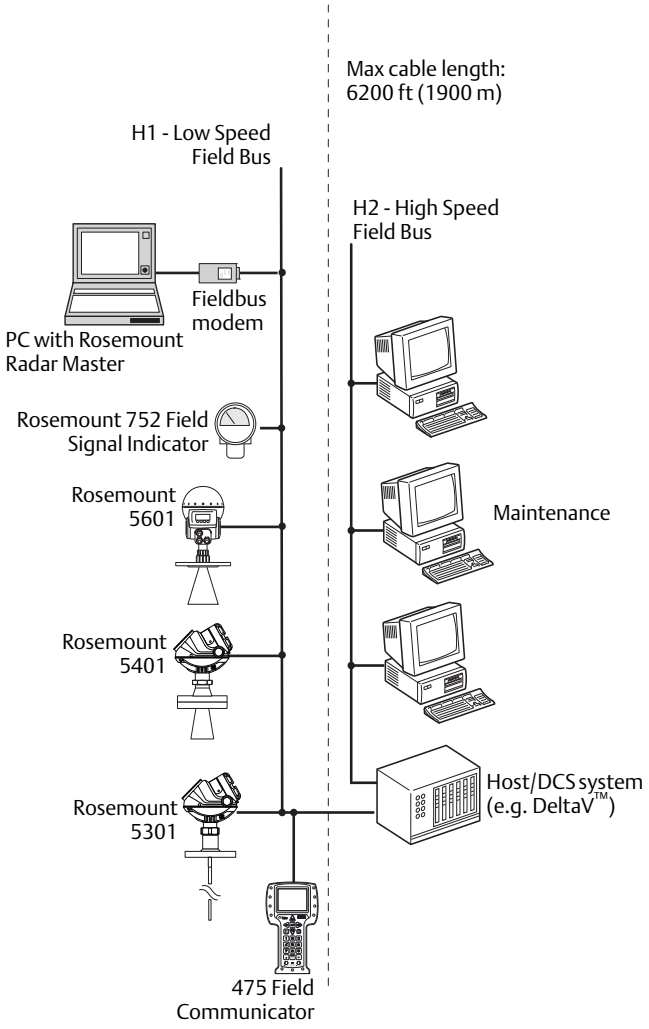

External power supply[(1)]

Approval type	Input voltage (U_i)
None	9 - 32 Vdc
Non-sparking/Energy Limited	9 - 32 Vdc
Intrinsically Safe	9 - 30 Vdc
FISCO	9 - 17.5 Vdc
Explosion-proof/Flameproof	16 - 32 Vdc

For Explosion-proof/Flameproof installations the Rosemount 5300 Series Transmitters have a built-in barrier; no external barrier needed.[(2)]

Quiescent current draw

22 mA

Blocks and execution time

Block	Execution time
1 Resource	N/A
3 Transducer	N/A
6 Analog Input (AI)	10 ms
1 Proportional/Integral/Derivate (PID)	15 ms
1 Signal Characterizer (SGCR)	10 ms
1 Integrator (INT)	10 ms
1 Arithmetic (ARTH)	10 ms
1 Input Selector (ISEL)	10 ms
1 Control Selector (CS)	10 ms
1 Output Splitter (OS)	10 ms

FOUNDATION fieldbus class (Basic or Link Master)

Link Master (LAS)

FOUNDATION fieldbus Instantiation

Yes

Conforming FOUNDATION fieldbus

ITK 6.0.1

FOUNDATION fieldbus alerts

- Field Diagnostics Alerts
- PlantWeb Alerts

(1) Reverse polarity protection.

(2) An external galvanic isolator is always recommended to be used for Flameproof/Explosion-proof installations.

Modbus (output option code M)

Output

The RS-485 Modbus version communicates by Modbus RTU, Modbus ASCII, and Levelmaster protocols.

8 data bits, 1 start bit, 1 stop bit, and software selectable parity. Baud Rate: 1200, 2400, 4800, 9600 (default), and 19200 bits/s. Address Range: 1 to 255 (default device address is 246).

HART communication is used for configuration via the HART terminals or tunneling via the RS-485.

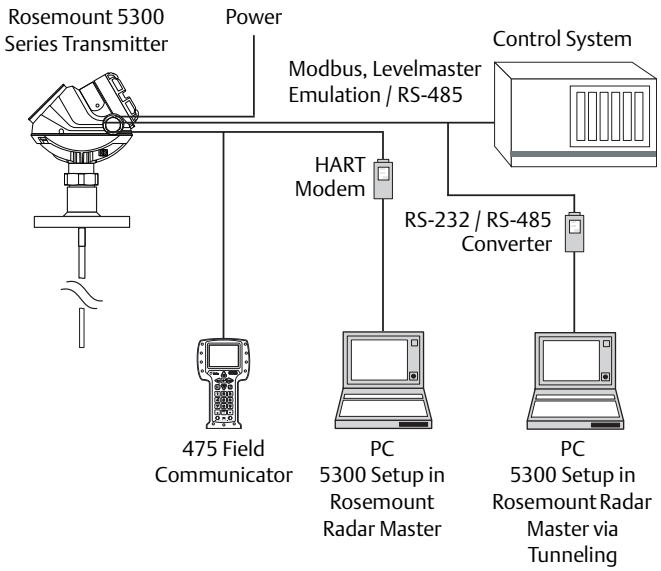

External power supply[1]

The input voltage U_i for Modbus is 8-30 Vdc (max. rating)

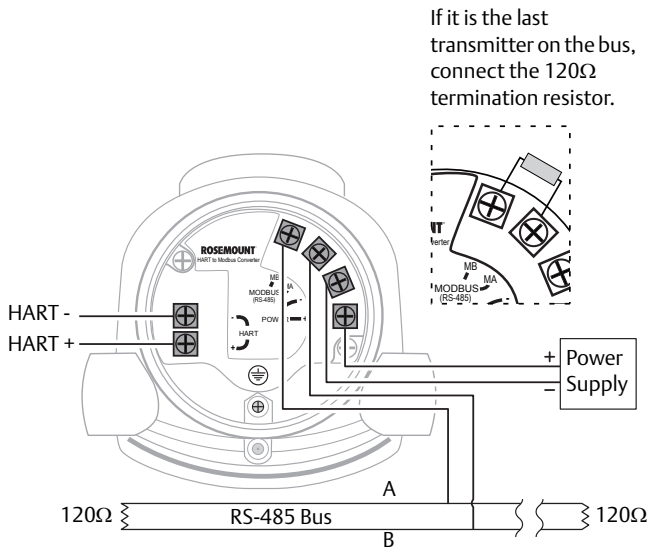

For Explosion-proof/Flameproof installations the Rosemount 5300 Series Transmitters have a built-in barrier; no external barrier needed.[2]

Power Consumption

< 0.5 W (with HART address=1)

< 1.2 W (incl. four HART slaves)

Display and configuration

Integral display (option code M1)

The integral digital display can toggle between: level, distance, volume, internal temperature, interface distance, interface level, peak amplitudes, interface thickness, percentage of range, analog current out.

Note

The display cannot be used for configuration purposes.

Remote display

Data can be read from the optional integral display or remotely using the Rosemount 751 Field Signal Indicator for 4-20 mA / HART (see Product Data Sheet, document number 00813-0100-4378), or the Rosemount 752 Remote Indicator for FOUNDATION fieldbus (see Product Data Sheet, document number 00813-0100-4377).

Configuration tools

- Rosemount Radar Master (included in the delivery)
- Device Descriptor (DD) based systems, e.g. AMS Device Manager, 475 Field Communicator, and DeltaV
- Device Type Manager (DTM) based systems (compliant with version 1.2 of the FDT/DTM specification), supporting configuration in for instance Yokogawa Fieldmate/PRM, E+H™ FieldCare®, and PACT*ware*

Output units

- Level, Interface and Distance: ft, inches, m, cm, or mm
- Level Rate: ft/s, m/s, in./min, m/h
- Volume: ft^3, $inch^3$, US gals, Imp gals, barrels, yd^3, m^3, or liters
- Temperature: °F and °C

(1) Reverse polarity protection.

(2) An external galvanic isolator is always recommended to be used for Explosion-proof/Flameproof installations.

Output variables

	5301	5302	5303	PV, SV, TV, QV
Level	X	X	X	X
Distance to Level (Ullage)	X	X	X	X
Level Rate	X	X	X	X
Signal Strength	X	X	X	X
Volume	X	X	X	X
Internal Temperature	X	X	X	X
Interface Level	(X)[1]	X	N/A	X
Interface Distance	(X)[1]	X	N/A	X
Interface Level Rate	(X)[1]	X	N/A	X
Interface Signal Strength	(X)[1]	X	N/A	X
Upper Layer Thickness	(X)[1]	X	N/A	X
Lower Volume	(X)[1]	X	N/A	X
Upper Volume	(X)[1]	X	N/A	X
Signal Quality	X	X	X	(X)[2]
Surface/Noise Margin	X	X	X	(X)[2]
Vapor DC	X	N/A	N/A	(X)[2]
Analog Output Current[3]	X	X	X	N/A
% of Range[4]	X	X	X	N/A

(1) Interface measurement only for fully submerged probe, see page 32.

(2) Not available as primary variable.

(3) LCD display variable only. Not available for FOUNDATION fieldbus, Modbus Signal Output, or for HART units in fixed current mode.

(4) LCD display variable only. Not available for FOUNDATION fieldbus Signal Output.

Damping

0-60 s (2 s, default value)

Diagnostics

General

Transmitter diagnostics with alerts include hardware and software errors, electronics temperature, probe missing, and invalid measurement and configuration error diagnostics. In addition to this, echo curve and variable logging including signal strength facilitate easy on-line troubleshooting.

Diagnostics Suite (option code D01 or DA1)

Signal Quality Metrics - Diagnostics package that monitors the relations between surface, noise and threshold. The function can be used to detect abnormal conditions in the process such as probe contamination or sudden loss of signal strength. Signal Quality Metrics parameters are available as Output Variables in Rosemount Radar Master, and can be sent to Distributed Control System (DCS) to trigger an alarm.

Verification reflector (option code HL1, HL2, or HL3)

The reflector, which is available with single lead flexible probes, is used to test and continuously verify that the transmitter is functioning properly in both tank and chamber/pipe installations. Compared to traditional diagnostics that only monitor the transmitter electronics, the reflector can also be used to diagnose the upper parts of the probe inside the tank for e.g. build-up, corrosion monitoring and other process related conditions.

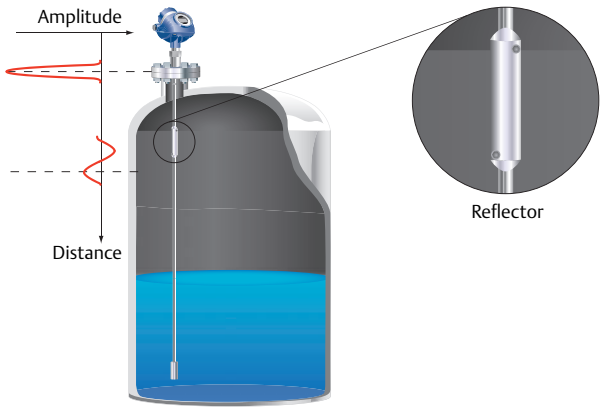

The primary use-cases for the reflector are:

- Verification of transmitter and probe (i.e. proof-testing)
- High level supervision (i.e. continuous monitoring of high level condition)

Verification

During commissioning, the location and amplitude characteristics of the reflector are stored in the transmitter. When the test procedure is later initiated, the stored reflector data is compared to the current measurement to verify the integrity of the measurement electronics and upper part of the probe.

During the test, the transmitter will output a level corresponding to the reflector position, which can be used to verify the integrity of the transmitter output.

High level supervision

Additionally, the reflector's unique echo characteristics aid the transmitter to locate a liquid surface above the reflector, thereby offering increased reliability to detect high level conditions at a user selectable limit.

The transmitter continuously monitors the status of the reflector and abnormal conditions generate alarms and alerts as appropriate.

Limitations for verification reflector

- Not to be used in fully submerged applications
- Minimum dielectric constant: 2.4 (for code HL1)
  2.0 (for codes HL2 and HL3)

For more information and installation requirements, refer to the High Level Supervision Manual (document number 00809-0900-4530).

Temperature and pressure limits

Ambient temperature

The maximum and minimum ambient temperature for the electronics depends on the process temperature (as described by the graph below) and on the approval (see "Product Certifications" on page 48).

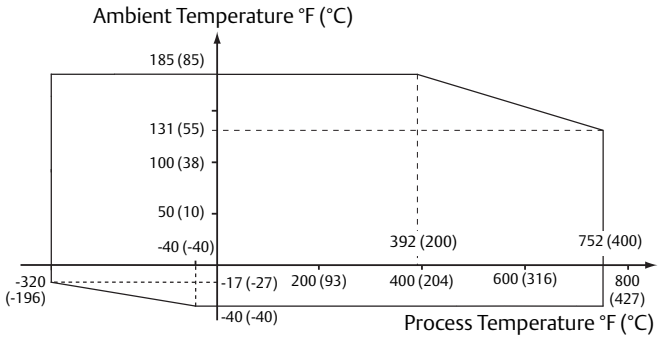

Note
Nozzle insulation for the HTHP version (Operating Temperature and Pressure code H) should not exceed 4 in. (10 cm).

Note
The temperature range for the optional Integral Display is -4 °F to 158 °F (-20 °C to 70 °C).

Note
In applications where the ambient temperature exceeds the limits of the electronics, a Remote Mounting connection can be used. The maximum temperature for the Remote Mounting connection at the vessel connection point is 302 °F (150 °C).

Storage temperature

-58 °F to 194 °F (-50 °C to 90 °C)
With Integral Display: -40 °F to 185 °F (-40 °C to 85 °C)

Process temperature

Note
The flanges, except the Fisher and Masoneilan flanges, are triple certified for the materials 316, 316L, and EN 1.4404. The pressure rating is according to 316L.

Max. Rating, Standard Tank Connections

(Operating Temperature and Pressure code S)

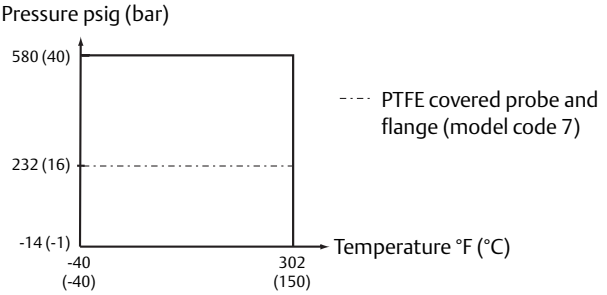

Final rating may be lower depending on flange, material of construction, and O-ring selection.

Temperature ranges for standard tank seals with different O-ring materials

O-ring material	Temperature °F (°C) in air	
	Min.	Max.
Viton Fluoroelastomer	5 (-15)	302 (150)
Ethylene Propylene (EPDM)	-40 (-40)	266 (130)
Kalrez 6375 Perfluoroelastomer	14 (-10)	302 (150)
Nitrile Butadiene (NBR)	-31 (-35)	230 (110)

Note
Always check the chemical compatibility of the o-ring material with your application. If the O-ring material is not compatible with its chemical environment, the O-ring may eventually malfunction.

Max. Rating, High Temperature and High Pressure (HTHP) Tank Connections

(Operating Temperature and Pressure code H)

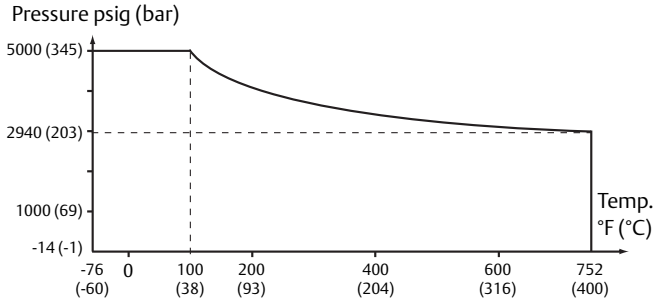

Final rating may be lower depending on flange selection and material of construction.

Max. Rating, High Pressure (HP) Tank Connections
(Operating Temperature and Pressure code P)

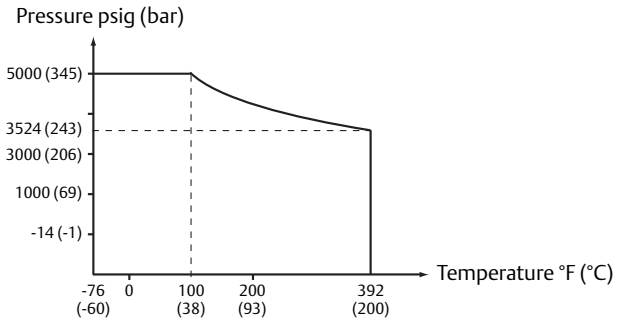

Final rating may be lower depending on flange selection and material of construction.

Max. Rating, Cryogenic Temperature Tank connections
(Operating Temperature and Pressure code C)

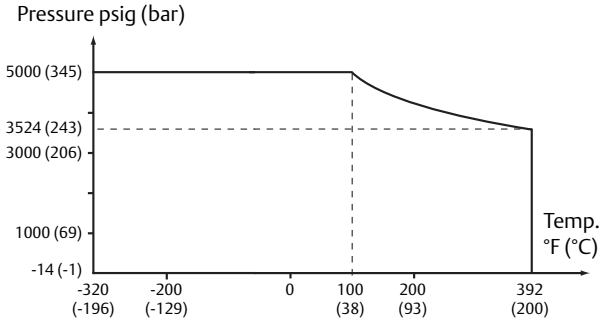

Final rating may be lower depending on flange selection.

ASME/ANSI flange rating
316L SST flanges according to ASME B16.5 Table 2-2.3:
- Standard: Max. 302 °F/580 psig (150 °C/40 Bar)
- HP/C: Class 2500 up to max 392 °F (200 °C)
- HTHP: Class 2500 up to max 752 °F (400 °C)

Alloy C-276 (UNS N10276) flanges according to ASME B16.5 Table 2-3.8:
- Standard: Max. 302 °F/580 psig (150 °C/40 Bar)
- HP: Class 1500 up to max 392 °F (200 °C)
- HTHP: Class 1500 up to max 752 °F (400 °C)

Duplex 2205 (UNS S31803) flanges according to ASME B16.5 table 2-2.8:
- Standard: Max. 302 °F/580 psig (150 °C/40 Bar)
- HP: Class 1500, -51 °F (-46 °C) up to max 392 °F (200 °C)
- HTHP: Class 1500, -51 °F (-46 °C) up to max 599 °F (315 °C)

EN flange rating
EN 1.4404 according to EN 1092-1 material group 13E0:
- Standard: Max. 302 °F/580 psig (150 °C/40 Bar)
- HP/C: PN 320 up to max 392 °F (200 °C)
- HTHP: PN 320 up to max 752 °F (400 °C)

Alloy C-276 (UNS N10276) flanges according to EN 1092-1 material group 12E0:
- Standard: Max. 302 °F/580 psig (150 °C/40 Bar)
- HP: PN 320 up to max 392 °F (200 °C)
- HTHP: PN 320 up to max 752 °F (400 °C)

Duplex 2205 (EN 1.4462) flanges according to EN 1092-1 material group 16E0:
- Standard: Max. 580 psig (40 Bar), -22 °F (-30 °C) up to max 302 °F (150 °C)(1)
- HP: PN 320, -22 °F (-30 °C) up to max 392 °F (200 °C)(1)
- HTHP: PN 320, -22 °F (-30 °C) up to max 482 °F (250 °C)(1)

Fisher & Masoneilan flange rating
316L SST according to ASME B16.5 Table 2-2.3:
- Standard: Max. 302 °F/580 psig (150 °C/40 Bar)
- HP/C: Class 600 up to max 200 °C
- HTHP: Class 600 up to max 400 °C

JIS flange rating
316L SST according to JIS B2220 material group 2.3:
- Standard: Max. 302 °F/580 psig (150 °C/40 Bar)
- HP/C: Max. temp. 200 °C. Final rating depends on flange.
- HTHP: Max. temp. 400 °C. Final rating depends on flange.

Tri Clamp rating
Maximum pressure is 16 bar for 1½-in. (37.5 mm) and 2-in. (50 mm) housing; and 10 bar for 3-in. (75 mm) and 4-in. (100 mm) housing. The final rating depends on the clamp and gasket. Tri Clamp is available for the Standard Temperature and Pressure seal.

Plate design
Certain models of flanged alloy and PTFE covered probes have a tank connection design with a protective flange plate of the same material as the probe and with a backing flange in 316L / EN 1.4404. The protective flange plate prevents the backing flange from being exposed to the tank atmosphere.

Flange rating according to SST backing flange ASME B16.5 Table 2-2.3, EN 1092-1 material group 13E0, and JIS B2220 material group 2.3.

Alloy C-276 protective plate:
- Standard: Max. 302 °F/580 psig (150 °C/40 Bar). Flange plate design is available up to Class 300/PN 40
- HP: Max. temp. 200 °C. Flange plate design is available up to Class 600/PN 63
- HTHP: Max. temp. 400 °C. Flange plate design is available up to Class 600/PN 63

Alloy 400 protective plate:
- Standard: Max. 302 °F/580 psig (150 °C/40 Bar). Flange plate design is available up to Class 300/PN 40

PTFE protective plate:
- Standard: Max. 302 °F/232 psig (150 °C/16 Bar)

(1) Minimum temperature limit due to EN13445-2.

Conditions used for flange strength calculations

316L SST or process connection with plate design

	Bolting material	Gasket		Flange material	Hub material
		Standard/HP/HTHP/C	HP/HTHP/C		
ASME/ ANSI	Stainless steel SA193 B8M Cl.2	Soft (1a) with min. thickness 1.6 mm	Spiral wound gasket with nonmetallic filler (1b)	Stainless steel A182 Gr. F316L and EN 10222-5-1.4404	Stainless steel SA479M 316L, and EN 10272-1.4404
EN, JIS	EN 1515-1/-2 group 13E0, A4-70.	Soft (EN 1514-1) with min. thickness 1.6 mm	Spiral wound gasket with nonmetallic filler (EN 1514-2)		

Alloy C-276

	Bolting material	Gasket		Flange material	Hub material
		Standard/HP/HTHP	HP/HTHP		
ASME / ANSI	UNS N10276	Soft (1a) with min. thickness 1.6 mm	Spiral wound gasket with nonmetallic filler (1b)	SB462 Gr. N10276 (solution annealed condition) or SB575 Gr. N10276 (solution annealed condition)	SB574 Gr. N10276
EN, JIS		Soft (EN 1514-1) with min. thickness 1.6 mm	Spiral wound gasket with nonmetallic filler (EN 1514-2)		

Duplex 2205

	Bolting material	Gasket		Flange material	Hub material
		Standard/HTHP	HP/HTHP		
ASME / ANSI	A193 B7 or A320 L7	Soft (1a) with min. thickness 1.6 mm	Spiral wound gasket with nonmetallic filler (1b)	Duplex stainless steel SA/A182 F51 and EN10222-5-1.4462 or SA/A240 Gr. S31803 and EN10028-7-1.4462	Stainless steel SA479M S31803 and EN 10272-1.4462
EN, JIS	Bumax 88	Soft (EN 1514-1) with min. thickness 1.6 mm	Spiral wound gasket with nonmetallic filler (EN 1514-2)		

Interface measurements

The Rosemount 5302 is a good choice for measuring the interface of oil and water, or other liquids with significant dielectric differences. It is also possible to measure interfaces with a Rosemount 5301 in applications where the probe is fully submerged in the liquid.

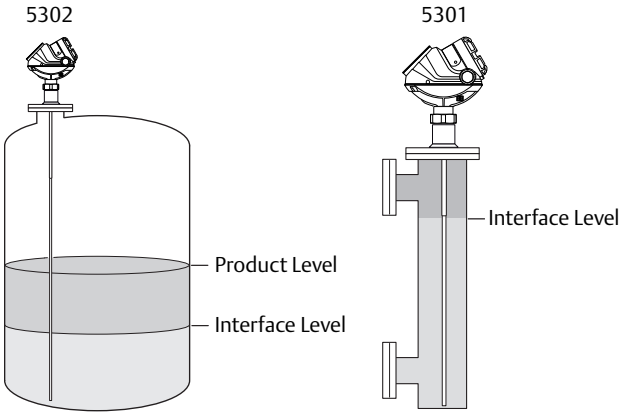

If interface is to be measured, follow these criteria:

- The dielectric constant of the upper product should be known and should not vary. The Radar Master software has a built-in dielectric constant calculator to help the user estimate the upper product dielectric constant.
- The dielectric constant of the upper product must have a smaller dielectric constant than the lower product.
- The difference between the dielectric constants for the two products must be larger than 6.
- The maximum dielectric constant for the upper product is 8 for the single lead probes, 10 for the coaxial, and 7 for the twin lead probes.
- The upper product thickness must be larger than 5.1 in. (0.13 m) for all probes, except the HTHP coaxial probe, which requires 8 in. (0.2 m) to distinguish echoes from the two liquids.
- Sometimes there is an emulsion layer (mix of the products) between the two products which can affect interface measurements. For guidelines on emulsion, consult your local Emerson Process Management representative.

For information on the maximum allowable product thickness and measuring range, see "Interface measuring range" on page 39.

For additional information, see the Guided Wave Radar Interface Measurement Technical Note (document number 00840-0400-4530).

Solids measurements

Rosemount 5303 with a flexible single lead probe is a good choice for measuring solids, such as powders, granulates, or pellets with a grain size of up to 0.8 in. (20 mm). The measurement is made where the probe comes in contact with the material, which means that the shape of the material surface is not critical for the measurement. Measurements are also independent of moisture and material fluctuations such as density and temperature.

The following should be kept in mind:

- In solid applications, media may cause down-pull forces on silo roofs. The silo roof must be able to withstand the probe collapse load, or at least the maximum probe tensile load.
- The tensile load depends on the silo size, material density, and the friction coefficient. Forces increase with the buried length, the silo, and probe diameter. In critical cases, such as products with a risk of build-up, probe for high physical weight loads are available.
- Forces on probes, depending on their position, are generally two to ten times greater on probes with a tie-down than on probes with ballast weights.
- For environments where electrostatic discharges (plastics) are likely to occur, grounding of the probe and vessel may be required.

Note

Abrasive media can wear out the probe, so consider using non-contacting radar.

For more information, refer to the Measuring Level and Volume of Solid Materials Technical Note (document number 00840-0600-4530).

High pressure steam applications

Considerations

Saturated steam under high pressure can influence radar level transmitter measurements. Rosemount 5301 with Dynamic Vapor Compensation will automatically compensate for this and maintain the level accuracy.

- Probe type 3V (for 3- to 4-in. chambers) or 4U (for 2-in. chambers) must be used.
- Mount in a 2-, 3-, or 4-in. bypass chamber with flanges appropriately sized for the pressure and temperature of the application.
- Dynamic Vapor Compensation requires a minimum distance from the flange to the surface level in order to measure the change in the vapor dielectric constant. If the level rises within this area, the unit switches over to static compensation, using the last known vapor dielectric constant.

Probe Type 3V

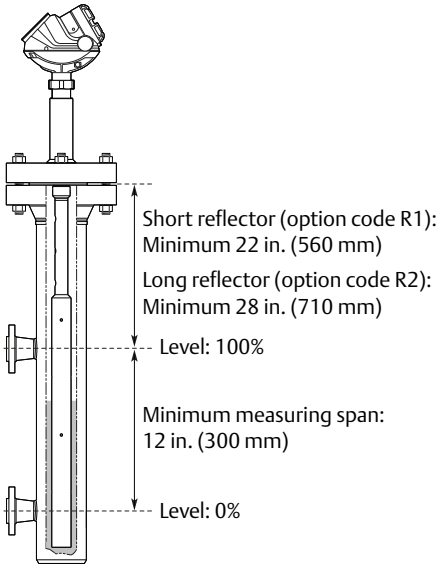

Probe Type 4U

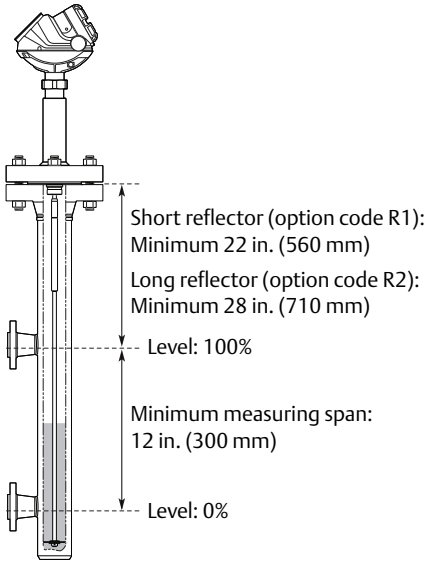

- If a 5300 Series Transmitter is ordered from Rosemount together with a 9901 Chamber, these space requirements are met by using the option code G1or G2 for the chamber. G1 is used with the short reference reflector and G2 is used with the long reference reflector. If an existing chamber is used which does not meet these space requirements, a spool piece can be added.

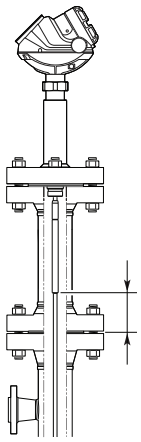

For the 4U probe, the spool piece needs to be at least 2 in. (50 mm) longer or shorter than the reference reflector.

For a spool piece with the 3V probe, this is not a requirement.

- Always ensure that there are no disturbances from inlets etc close to the reference reflector end when using probe type 4U.

Select reference reflector

- The long reflector, 20 in. (500 mm), has the best accuracy and is recommended for all chambers where the dimensions of the chamber allow for it.
- If the distance from the flange to the upper inlet is less than 28 in. (710 mm), the short reflector should be chosen. This distance is a minimum when dynamic compensation is required within the whole measuring range from the lower to the upper inlet. If this is not required, the long reflector can be used and dynamic compensation is possible up to 28 in. (710 mm) from the flange.

For more information, refer to the Using Guided Wave Radar for Level in High Pressure Steam Applications Technical Note (document number 00840-0100-4530).

Performance specifications

General

Reference conditions
Single Standard probe, 77°F (25°C) in water (DC=80) and ambient pressure in a 4" pipe using Trim Near Zone function.

Reference accuracy[(1)]
± 0.12 in. (3 mm) or 0.03% of measured distance, whichever is greatest

Repeatability
± 0.04 in. (1 mm)

Ambient temperature effect
± 0.008 in. (0.2 mm) /°K or ± 30 ppm/°K of measured value, whichever is greatest

Update interval
Minimum 1 update per second

Environment

Vibration resistance
- Aluminum housing: IEC 60770-1 Level 1
- Stainless Steel housing: IACS E10

Electromagnetic compatibility
Emission and Immunity: EMC directive 2004/108/EC, EN61326-1:2006 and EN61326-3-1:2006. NAMUR recommendations NE21

CE-mark
Complies with applicable directives (EMC, ATEX)

Built-in lightning protection
EN 61326, IEC 61000-4-5, level 2kV (6kV with T1 terminal block)

Contamination/product build-up
- Single lead probes are preferred when there is a risk of contamination (because build-up can result in the product bridging across the two leads for twin versions; between the inner lead and outer pipe for the coaxial probe).
- For viscous or sticky applications, PTFE probes are recommended. Periodic cleaning may also be required.
- For viscous or sticky applications, it is not recommended to use centering discs mounted along the probe.
- Signal Quality Metrics (option code D01, or DA1) can be used in determining when to clean the probe. Transmitters equipped with the Diagnostics Suite option can calculate Signal Quality Metrics.
- Maximum error due to contamination is 1-10% depending on probe type, dielectric constant, contamination thickness and contamination height above product surface.

Maximum recommended viscosity and contamination/build-up

	Coaxial	Twin lead	Single lead
Maximum viscosity	500 cP	1500 cP	8000 cP [(1)(2)(3)]
Contamination/ build-up	Not recommended	Thin build-up allowed, but no bridging	Build-up allowed

(1) Consult your local Emerson Process Management representative in the case of agitation/turbulence and high viscous products.

(2) Be cautious in HTHP viscous or crystallizing media applications where temperature at instrument connection is significantly lower than process temperature with risk of coating in the upper part of probe that may reduce the measurement signal. Consider using HP or STD probes in such applications.

(3) For viscous or sticky applications, it is not recommended to use centering discs mounted along the probe.

(1) For probes with spacers, the accuracy may deviate close to the spacers. Accuracy may be affected by remote housing.

Measuring range

See Table 4 for each probe's measuring range and minimum dielectric constant. Due to the measuring range depending on the application and factors described below, the values are a guideline for clean liquids. For more information, ask your local Emerson Process Management representative.

Note

For Remote Housing, see Table 5 on page 36 for the maximum recommended measuring range for different Remote Housing lengths, installation types, Dielectric Constants, and probe types.

Different parameters (factors) affect the echo and therefore the maximum measuring range differs depending on application according to:

- Disturbing objects close to the probe.
- Media with higher dielectric constant (e_r) gives better reflection and allows a longer measuring range.
- Surface foam and particles in the tank atmosphere may affect measuring performance.
- Heavy coating or contamination on the probe should be avoided since it can reduce measuring range and might cause erroneous level readings.

Table 4. Measuring Range and Minimum Dielectric Constant

	Rigid single lead/ segmented rigid single lead	Flexible single lead[1]	Coaxial	Rigid twin Lead	Flexible twin lead
Maximum measuring range	9 ft. 10 in. (3 m) for 8 mm probes (code 4A) 19 ft. 8 in. (6 m) for 13 mm probes (code 4B) 32 ft 9 in. (10 m) for 13 mm probes (code 4S)	164 ft (50 m)	19 ft 8 in. (6 m)	9 ft 10 in. (3 m)	164 ft (50 m)
Minimum dielectric constant	1.4 (Std) (1.25 if installed in a metallic bypass or stilling well)[1][2] 1.6 (HP/HTHP/C) (1.4 if installed in a metallic bypass or stilling well)[1][2]	1.4 (Std), up to 49 ft (15 m)[1] 1.6 (HP/HTHP/C), up to 49 ft (15 m)[1] (Std/HP/HTHP/C) 1.8, up to 82 ft (25 m)[1] 2.0, up to 115 ft (35 m)[1] 3, up to 138 ft (42 m) 4, up to 151 ft (46 m) 6, up to 164 ft (50 m)	1.2 (Std) 1.4 (HP/C) 2.0 (HTHP)	1.4 (Std)	(Std) 1.4, up to 82 ft (25 m)[1] 2.0, up to 115 ft (35 m)[1] 2.5, up to 131 ft (40 m)[1] 3.5, up to 148 ft (45 m) 6, up to 164 ft (50 m)

(1) Probe end projection software function will improve the minimum measurable dielectric constant. Consult the factory for details.

(2) May be lower depending on installation.

Table 5. Remote Housing Measuring Range

		Dielectric constant	Rigid single 8 mm	Rigid single 13 mm/ segmented rigid single	Flexible single	Coaxial	Rigid twin	Flexible twin
1 m remote housing	Chamber / pipe installations ≤ 4 in. (100 mm)	1.4	4 ft (1.25 m)	19 ft (6 m)(1)	33 ft (10 m)(1)(2)	19 ft (6 m)	10 ft (3 m)(1)	33 ft (10 m)(1)(2)
		2	10 ft (3 m)(1)	19 ft (6 m)(1)	33 ft (10 m)(1)(2)	19 ft (6 m)	10 ft (3 m)(1)	33 ft (10 m)(1)(2)
		80	10 ft (3 m)	19 ft (6 m)(1)	33 ft (10 m)(1)(2)	19 ft (6 m)	10 ft (3 m)(1)	33 ft (10 m)(1)(2)
	Tank installations	1.4	4 ft (1.25 m)	4 ft (1.25 m)	4 ft (1.25 m)	19 ft (6 m)	4 ft (1.25 m)	4 ft (1.25 m)
		2	4 ft (1.25 m)	4 ft (1.25 m)	4 ft (1.25 m)	19 ft (6 m)	4 ft (1.25 m)	98 ft (30 m)(1)
		80	10 ft (3 m)(1)	10 ft (3 m)(1)	159 ft (48.5 m)(1)	19 ft (6 m)	10 ft (3 m)(1)	159 ft (48.5 m)(1)
2 m remote housing	Chamber / pipe installations ≤ 4 in. (100 mm)	1.4	9 ft (2.75 m)	19 ft (6 m)(1)	33 ft (10 m)(1)(2)	19 ft (6 m)	10 ft (3 m)(1)	33 ft (10 m)(1)(2)
		2	10 ft (3 m)(1)	19 ft (6 m)(1)	33 ft (10 m)(1)(2)	19 ft (6 m)	10 ft (3 m)(1)	33 ft (10 m)(1)(2)
		80	10 ft (3 m)	19 ft (6 m)	33 ft (10 m)(1)(2)	19 ft (6 m)	10 ft (3 m)(1)	33 ft (10 m)(1)(2)
	Tank installations	1.4	9 ft (2.75 m)	9 ft (2.75 m)	9 ft (2.75 m)	19 ft (6 m)	9 ft (2.75 m)	9 ft (2.75 m)
		2	9 ft (2.75 m)	9 ft (2.75 m)	9 ft (2.75 m)	19 ft (6 m)	9 ft (2.75 m)	98 ft (30 m)(1)
		80	10 ft (3 m)(1)	10 ft (3 m)(1)	154 ft (47 m)(1)	19 ft (6 m)	10 ft (3 m)(1)	154 ft (47 m)(1)
3 m remote housing	Chamber / pipe installations ≤ 4 in. (100 mm)	1.4	10 ft (3 m)	19 ft (6 m)	33 ft (10 m)(1)(2)	19 ft (6 m)	10 ft (3 m)(1)	33 ft (10 m)(1)(2)
		2	10 ft (3 m)	19 ft (6 m)	33 ft (10 m)(1)(2)	19 ft (6 m)	10 ft (3 m)(1)	33 ft (10 m)(1)(2)
		80	10 ft (3 m)	19 ft (6 m)	33 ft (10 m)(1)(2)	19 ft (6 m)	10 ft (3 m)(1)	33 ft (10 m)(1)(2)
	Tank installations	1.4	10 ft (3 m)	14 ft (4.25 m)	14 ft (4.25 m)	19 ft (6 m)	10 ft (3 m)(1)	14 ft (4.25 m)
		2	10 ft (3 m)	14 ft (4.25 m)	14 ft (4.25 m)	19 ft (6 m)	10 ft (3 m)(1)	98 ft (30 m)(1)
		80	10 ft (3 m)	19 ft (6 m)(1)	149 ft (45.5 m)(1)	19 ft (6 m)	10 ft (3 m)(1)	149 ft (45.5 m)(1)

(1) Accuracy may be affected up to ± 1.2 in. (30 mm).

(2) Required chamber/pipe size is 3 or 4 in. (75 -100 mm).

Accuracy over measuring range

The measuring range depends on probe type, dielectric constant of the product and installation environment, and is limited by the Blind Zones at the very top and bottom of the probe. In the Blind Zones, the accuracy exceeds ±1.18 in. (30 mm), and measurements may not be possible. Measurements close to the Blind Zones will have reduced accuracy.

The following conditions will impact the Blind Zones:

- If the single lead probes or twin probes are installed in a nozzle, the nozzle height shall be added to the specified Upper Blind Zone.
- The measuring range for the PTFE covered Flexible Single Lead probe includes the weight when measuring on a high dielectric media.
- When using a metallic centering disc, the Lower Blind Zone is 8 in. (20 cm), including weight if applicable. When using a PTFE centering disc, the Lower Blind Zone is not affected.

Figure 1, Figure 2, and Figure 3 illustrate the accuracy over measuring range at reference condition with alternating probe types and varying dielectric constant of the product.

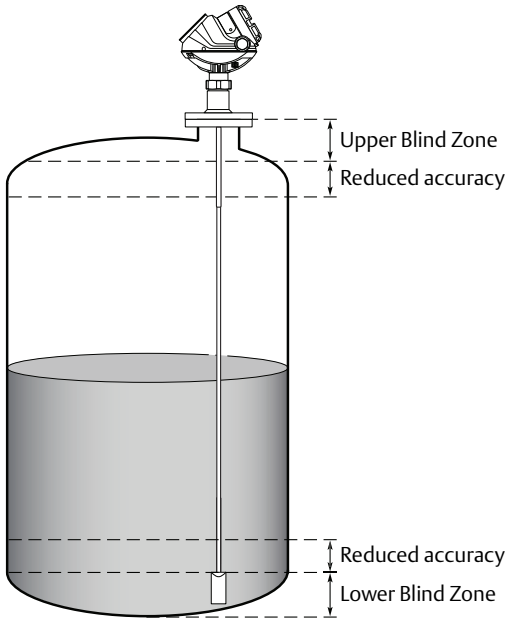

Note

Measurements may not be possible in the Blind Zones, and measurements close to the Blind Zones will have reduced accuracy. Therefore, the 4-20 mA points should be configured outside these zones.

Figure 1. Accuracy Over Measuring Range for Single Lead Probes (Rigid, Segmented Rigid, and Flexible)

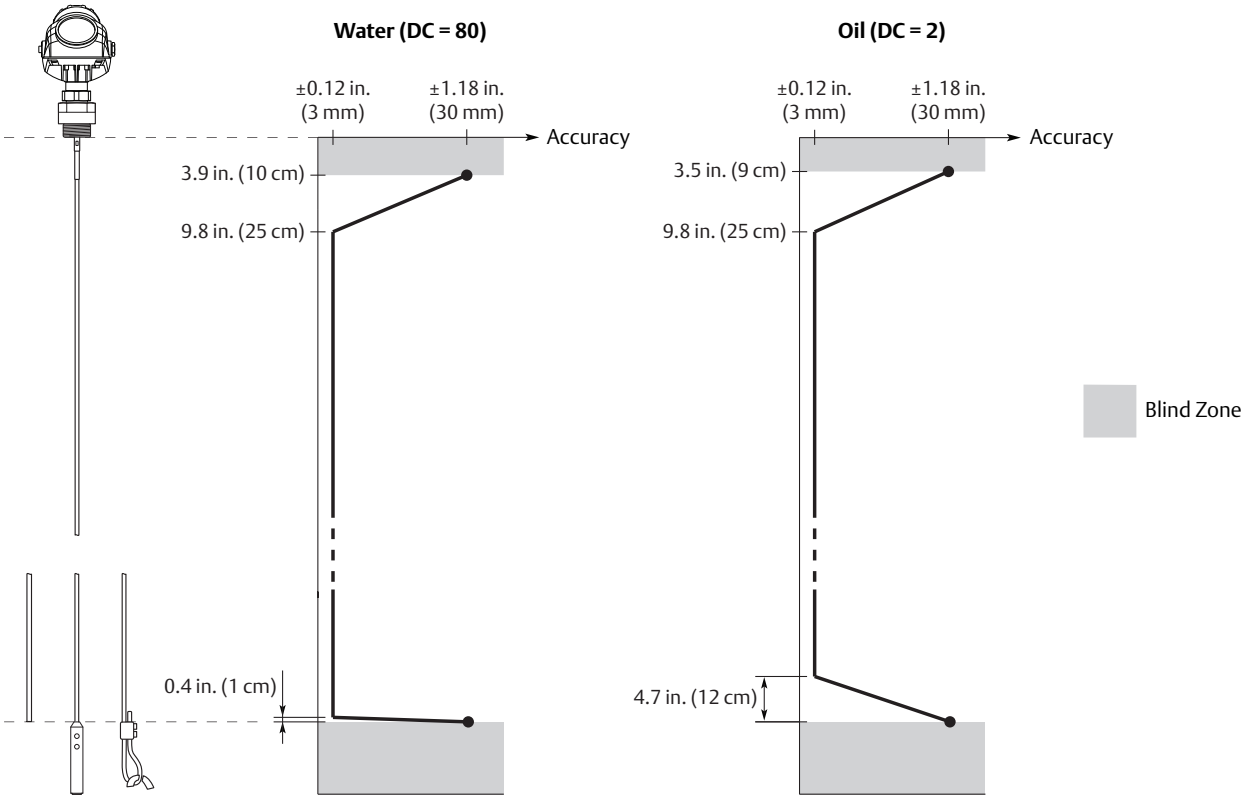

Figure 2. Accuracy Over Measuring Range for Coaxial Probe

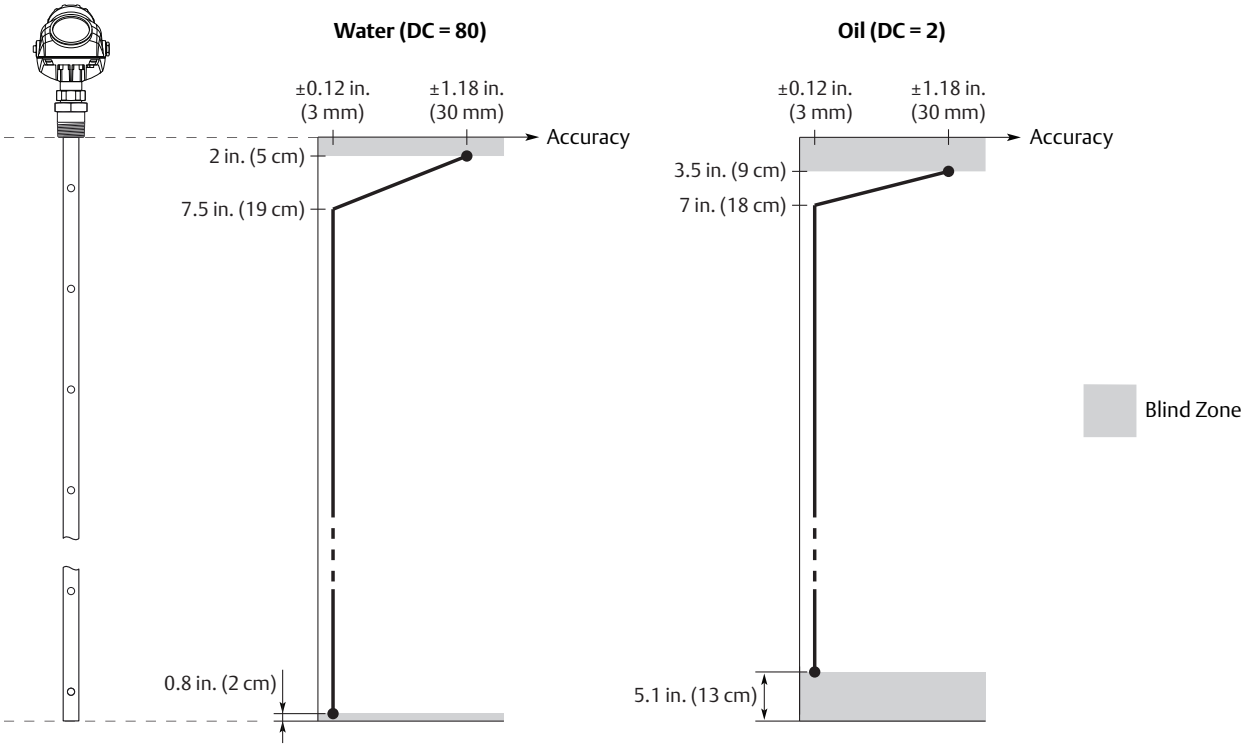

Figure 3. Accuracy Over Measuring Range for Twin Lead Probes

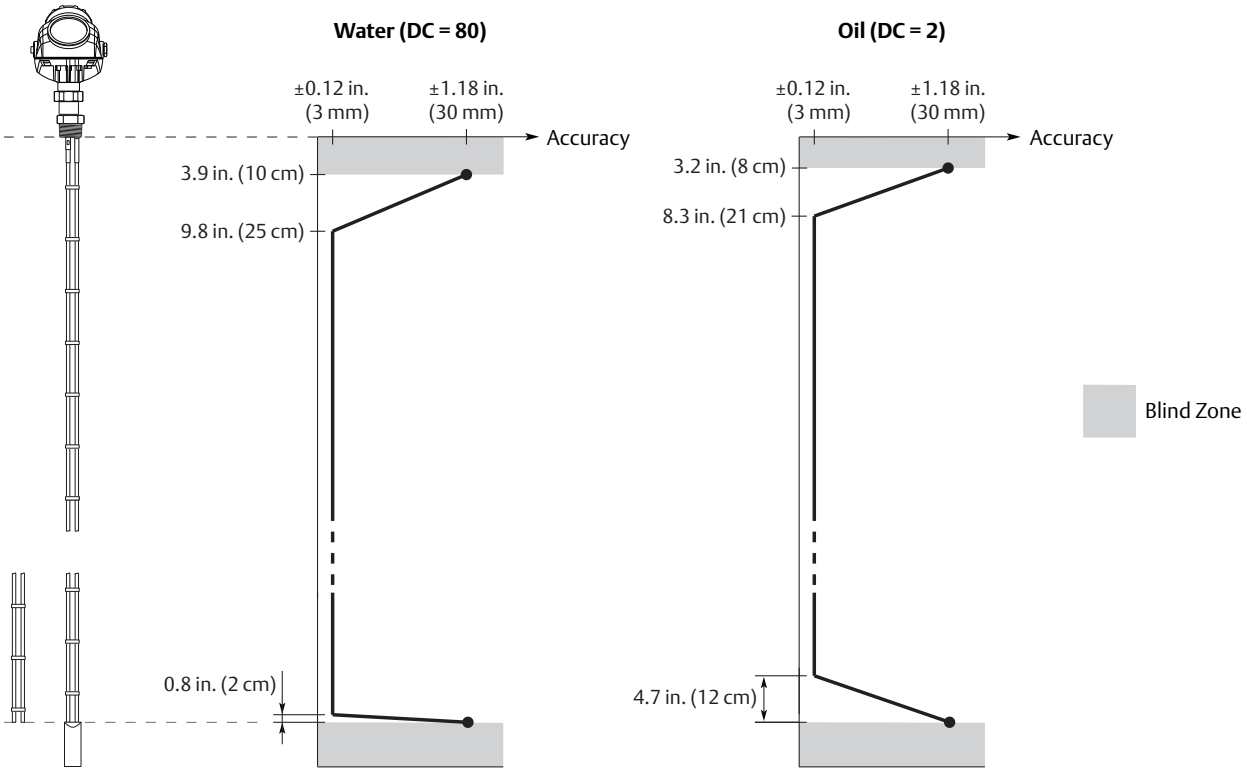

Interface measuring range

The maximum allowable upper product thickness/measuring range is primarily determined by the dielectric constants of the two liquids.

Typical applications include interfaces between oil / oil-like and water / water-like liquids with a low (<3) dielectric constant for the upper product and a high (>20) dielectric constant for the lower product. For such applications, the maximum measuring range is limited by the length of the coaxial, rigid twin, and rigid single lead probes.

For flexible probes, the maximum measuring range is reduced by the maximum upper product thickness, according to the diagram below. The maximum interface distance is 164 ft (50 m) minus the maximum product thickness. However, characteristics may vary between the different applications.

Maximum upper product thickness for the flexible single lead probe in ft (m)

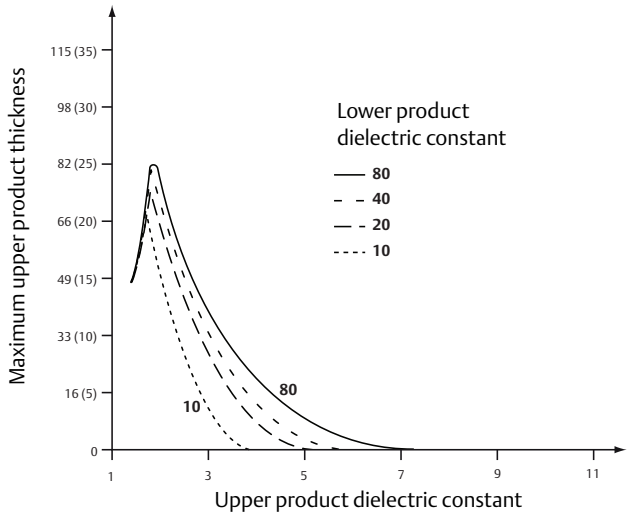

Maximum upper product thickness for the flexible twin lead probe in ft (m)

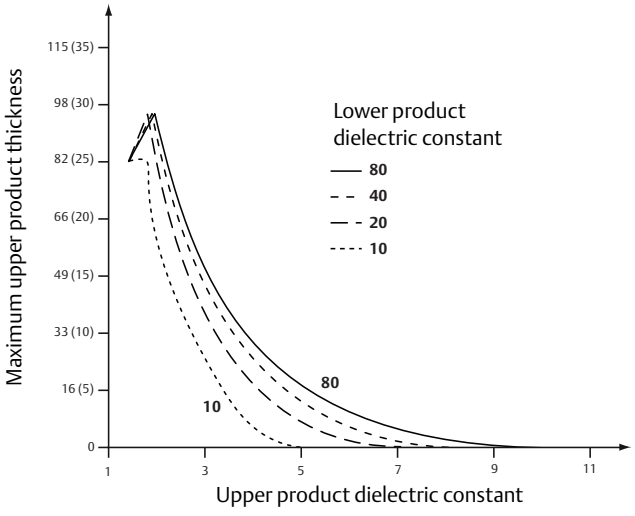

Physical specifications

Material selection

Emerson provides a variety of Rosemount product with various product options and configurations including materials of construction that can be expected to perform well in a wide range of applications. The Rosemount product information presented is intended as a guide for the purchaser to make an appropriate selection for the application. It is the purchaser's sole responsibility to make a careful analysis of all process parameters (such as all chemical components, temperature, pressure, flow rate, abrasives, contaminants, etc.), when specifying product, materials, options and components for the particular application. Emerson Process Management is not in a position to evaluate or guarantee the compatibility of the process fluid or other process parameters with the product, options, configuration or materials of construction selected.

Housing and enclosure

Type

- Dual compartment (terminal compartment and the electronics are completely separated).
- Two entries for conduit or cable connections.
- The transmitter housing is separable from probe assembly.
- The transmitter housing can be rotated in any direction.

Electrical connection

½ - 14 NPT for cable glands or conduit entries.
Optional: M20 x 1.5 conduit / cable adapter, M12 4-pin male eurofast connector or A size Mini 4-pin male minifast connector.

Recommended output cabling is twisted shielded pairs, 24-12 AWG

Housing material

Polyurethane-covered Aluminum, or Stainless Steel Grade CF8M (ASTM A743)

Ingress protection

NEMA® 4X, IP 66, IP67

Factory sealed

Yes

Weight

- Aluminum transmitter head: 4.4 lb (2 kg)
- SST transmitter head: 10.8 lb (4.9 kg)

Remote housing mounting

Kit that includes a flexible armored extension cable and a bracket for wall or pipe mounting. See "Remote Housing (Option Code B1, B2, B3)" on page 69 for the dimensions.

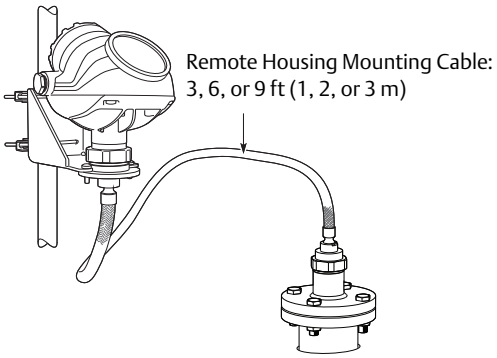

Tank connection

The tank connection consists of a tank seal, a flange, Tri Clamp, or NPT or BSP/G threads. See "Dimensional Drawings" on page 54.

Certain models of flanged alloy and PTFE covered probes have a tank connection design with a protective plate of the same material as the probe. This is to prevent the 316L / EN 1.4404 SST flange from being exposed to the tank atmosphere.

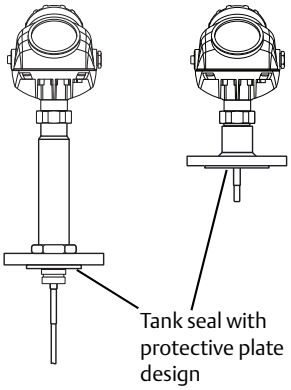

Flange dimensions

Follows ASME B 16.5, JIS B2220, and EN 1092-1 standards for blind flanges. For Proprietary Fisher and Masoneilan flanges, see "Special flanges and flushing connection rings" on page 70.

Vented flanges

Available with Masoneilan and Fisher vented flanges. Vented flanges must be ordered as accessories with a 1½-in. NPT threaded process connection (code RA); see "Special flanges and flushing connection rings" on page 70. As an alternative to a vented flange, it is possible to use a flushing connection ring on top of the standard nozzle.

Pressure Equipment Directive (PED)

Complies with 97/23/EC article 3.3

Probes

Probe versions
Coaxial, Rigid Twin Lead, Rigid Single Lead, Segmented Rigid Single Lead, Flexible Twin Lead, and Flexible Single Lead. Probes can be ordered in different materials and options for extreme temperatures and pressure.

For guidelines on which probe to select depending on application, see the Technical Note Guided Wave Radar Application Guidelines (document number 00840-2600-4811).

Total probe length
This is defined from the upper reference point to the end of the probe (weight included, if applicable).

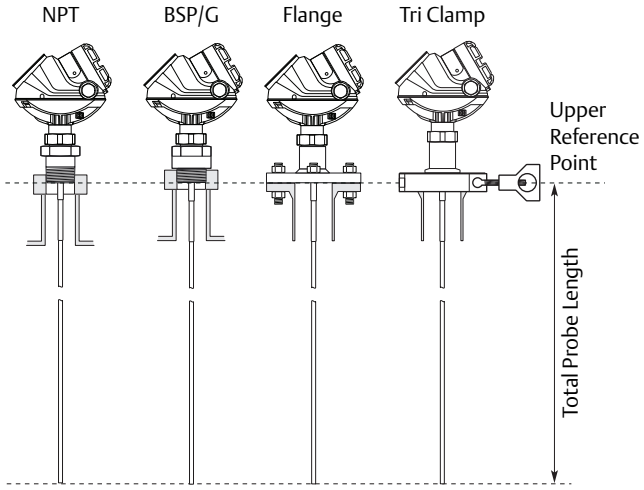

Select the probe length according to the required measuring range (the probe must be hung and fully extended through the entire distance where level readings are desired).

Cut-to-fit probes
Most of the probes can be cut in field. However, there are some restrictions for the standard and HP/C coaxial probes: these can be cut up to 2 ft. (0.6 m). Probes shorter than 4.1 ft. (1.25 m) can be cut to the minimum length of 1.3 ft. (0.4 m). The HTHP coaxial probe and the PTFE covered probes cannot be cut in the field.

Minimum and maximum probe length

Probe type	Probe length
Coaxial	1.3 to 19.7 ft (0.4 to 6 m)
Rigid Twin Lead	1.3 to 9.8 ft (0.4 to 3 m)
Flexible Twin Lead	3.3 to 164 ft (1 to 50 m)
Rigid Single Lead (0.3 in./8 mm)	1.3 to 9.8 ft (0.4 to 3 m)
Rigid Single Lead (0.5 in./13 mm)	1.3 to 19.7 ft (0.4 to 6 m)
Segmented Rigid Single Lead	1.3 to 32.8 ft (0.4 to 10 m)
Flexible Single Lead	3.3 to 164 ft (1 to 50 m)

Probe angle
0 to 90 degrees from vertical axis

Note
Models with QT option code should not be installed in angled probe installations.

Tensile strength
- 0.16 in. (4 mm) Flexible Single Lead SST: 2698 lb (12 kN)
- 0.16 in. (4 mm) Flexible Single Lead Alloy 400: 1124 lb (5 kN)
- 0.24 in. (6 mm) Flexible Single Lead SST: 6519 lb (29 kN)
- Flexible Twin Lead SST: 2023 lb (9 kN)

Collapse load
- 0.16 in. (4 mm) Flexible Single Lead SST: 3597 lb (16 kN)
- 0.16 in. (4 mm) Flexible Single Lead Alloy 400: 1349 lb (6 kN)
- 0.24 in. (6 mm) Flexible Single Lead SST: 7868 lb (35 kN)

Sideway capacity
- Coaxial: 73.7 ft. lbf, 3.7 lb at 19.7 ft. (100 Nm, 1.67 kg at 6 m)
- Rigid Twin Lead: 2.2 ft. lbf, 0.22 lb at 9.8 ft. (3 Nm, 0.1 kg at 3 m)
- Rigid Single Lead/Segmented Rigid Single Lead: 4.4 ft. lbf, 0.44 lb at 9.8 ft. (6 Nm, 0.2 kg at 3 m)

Material exposed to tank atmosphere

Standard Probe
(Operating Temperature and Pressure code S)

Material of construction code	Material
1 (probe types 6A and 6B)	316L SST (EN 1.4404), Duplex 2507 (UNS S32750/EN 1.4410), PTFE, PFA, and O-ring materials
1 (all other probe types)	316L SST (EN 1.4404), PTFE, PFA, and O-ring materials
2	Alloy C-276 (UNS N10276), PTFE, PFA, and O-ring materials
3	Alloy 400 (UNS N04400), Alloy K500, PTFE, PFA, and O-ring materials
7	PTFE (1 mm PTFE cover)
8	PTFE, 316 L SST (EN 1.4404), and O-ring materials
D	Duplex 2205 (UNS S31803/EN 1.4462), Duplex 2507 (UNS S32750/EN 1.4410), PTFE, PFA, and O-ring materials

HTHP Probe
(Operating Temperature and Pressure code H)

Material of construction code	Material
1	316L SST (EN 1.4404), Ceramic (Al2O3), Graphite, and Alloy 625
2 and H	Alloy C-276 (UNS N10276), Ceramic (Al2O3), Graphite, and Alloy 625
D	Duplex 2205 (UNS S31803/EN 1.4462), Ceramic (Al2O3), Graphite, and Alloy 625

HP Probe
(Operating Temperature and Pressure code P)

Material of construction code	Material
1	316L SST (EN 1.4404), Ceramic (Al2O3), Graphite, PFA, PTFE, and Alloy 625
2 and H	Alloy C-276 (UNS N10276), Ceramic (Al2O3), Graphite, PFA, PTFE, and Alloy 625
D	Duplex 2205 (UNS S31803/EN 1.4462), Ceramic (Al2O3), Graphite, PFA, PTFE, and Alloy 625

Cryogenic Probe
(Operating Temperature and Pressure code C)

Material of construction code	Material
1	316L SST (EN 1.4404), Ceramic (Al2O3), Graphite, PFA, PTFE, and Alloy 625

Weight

Flange and probes

Item	Weight
Flange	Depends on flange size
Coaxial probe	0.67 lb/ft (1 kg/m)
Rigid Single Lead probe (0.3 in./8 mm)	0.27 lb/ft (0.4 kg/m)
Rigid Single Lead probe (0.5 in./13 mm)	0.71 lb/ft (1.06 kg/m)
Segmented Rigid Single Lead probe	0.71 lb/ft (1.06 kg/m)
Rigid Twin Lead probe	0.40 lb/ft (0.6 kg/m)
Flexible Single Lead probe	0.05 lb/ft (0.08 kg/m)
Flexible Twin Lead probe	0.09 lb/ft (0.14 kg/m)

End weight

Item	Weight
Standard weight for 4 mm Single Lead probe	0.88 lb (0.40 kg)
Short weight (W2) for 4 mm Single Lead probe	0.88 lb (0.40 kg)
Heavy weight (W3) for 4 mm Single Lead	2.43 lb (1.10 kg)
Weight for 6 mm Single Lead probe	1.2 lb (0.55 kg)
Weight for PTFE covered Single Lead	2.2 lb (1 kg)
Weight for Twin Lead probe	1.3 lb (0.60 kg)

Installation in non-metallic tanks and open-air applications

- Avoid major sources of electrical disturbance in proximity of the installation, e.g. electrical motors, stirrers, servo mechanisms.

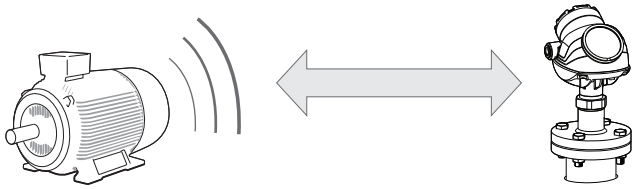

- For clean liquids, use a coaxial probe to reduce effect of potential electrical disturbances.

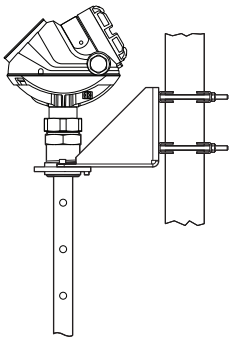

- For optimal single lead probe performance in non-metallic tanks, the probe must be mounted with a metal flange, or screwed in to a metal sheet (d > 14 in./350 mm) if a threaded version is used.

Metal flange

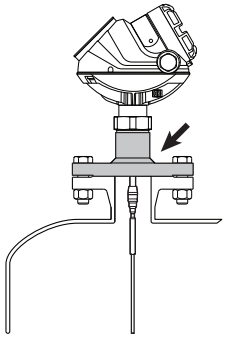

Metal sheet
(d > 14 in./350 mm)

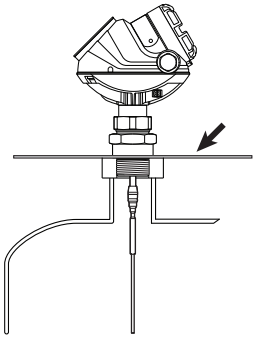

Nozzle considerations

- Make sure the nozzle does not extend into the tank.

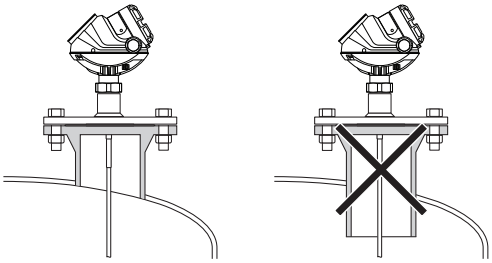

- When using single flexible probes in tall and narrow nozzles, a Long Stud (LS option) is recommended to prevent the probe from contacting the nozzle.

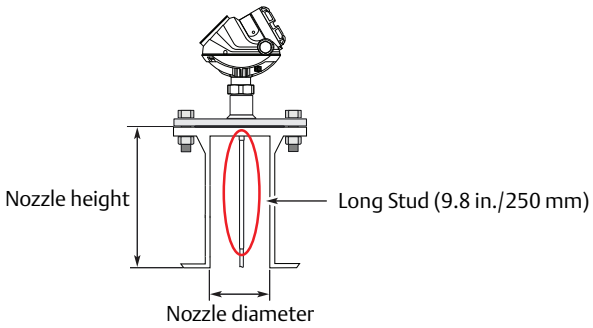

Minimum clearance

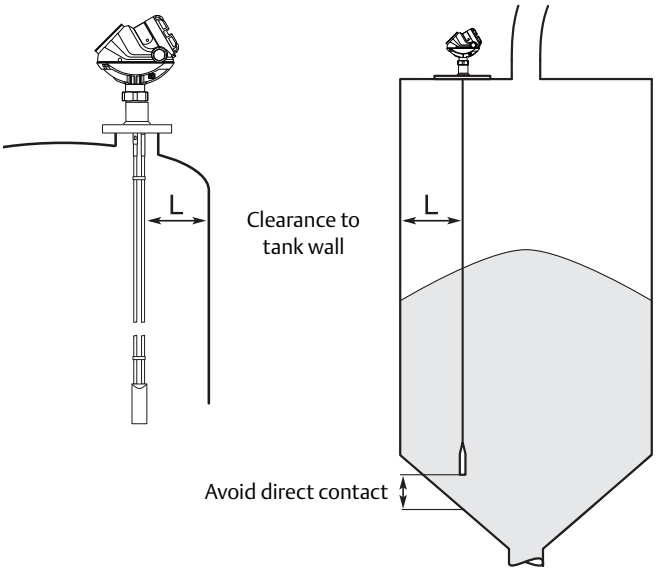

Table 6. Nozzle Considerations

	Rigid single lead/ segmented rigid single lead	Flexible single lead	Coaxial	Rigid twin lead	Flexible twin lead
Recommended nozzle diameter	6 in. (15 cm)	6 in. (15 cm)	> probe diameter	4 in. (10 cm)	4 in. (10 cm)
Minimum nozzle diameter(1)	2 in. (5 cm)	2 in. (5 cm)	> probe diameter	2 in. (5 cm)	2 in. (5 cm)
Recommended nozzle height	4 in. (100 mm) + nozzle diameter	4 in. (100 mm) + nozzle diameter(2)	N/A	4 in. (100 mm) + nozzle diameter	4 in. (100 mm) + nozzle diameter

(1) The Trim Near Zone (TNZ) function may be necessary or an Hold Off Distance/Upper Null Zone (UNZ) setup may be required to mask the nozzle.

(2) For nozzles taller than 4 in. (100 mm), the Long Stud version is recommended (option code LS) to prevent the flexible portion from touching the edge of the nozzle.

Table 7. Minimum Clearance

	Rigid single lead/ segmented rigid single lead	Flexible single lead	Coaxial	Rigid twin lead	Flexible twin lead
Min. clearance to tank wall (L) or obstruction(1)	4 in. (10 cm) if smooth metallic wall. 20 in. (50 cm) if disturbing objects, rugged metallic or concrete/plastic wall.	4 in. (10 cm) if smooth metallic wall. 20 in. (50 cm) if disturbing objects, rugged metallic or concrete/plastic wall.	0 in. (0 cm)	4 in. (10 cm)	4 in. (10 cm)
Min. chamber/ still pipe diameter	2 in. (5 cm) (2)	Consult the factory	1.5 in. (3.8 cm)	2 in. (5 cm)(3)	Consult the factory

(1) Minimum clearance from tank bottom for the coaxial and rigid single probes is 0.2 in. (5 mm).

(2) The probe must be centered in the pipe/bypass. A centering disc (see "Centering discs" on page 46 and page 13) can be used to prevent the probe from contacting the chamber wall.

(3) The centermost lead must be at least 0.6 in. (15 mm) away from the pipe/bypass wall.

Other mechanical considerations

To get best possible performance, the following must be considered before installing the transmitter:

- Inlets should be kept at a distance in order to avoid product filling on the probe
- Avoid physical contact between probes and agitators, as well as applications with strong fluid movement unless the probe is anchored
- Probe tie-down is recommended if the probe can move to within 1 ft. (30 cm) of any object during operations
- In order to stabilize the probe for side forces, it is possible to fix or guide the probe to the tank bottom

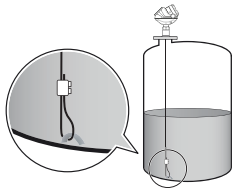

Flexible single lead probe with chuck installed in liquids and in solids.

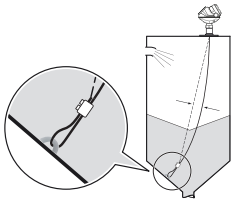

For solids, it is recommended that the probe should be slack to prevent high tensile loads.

See the Rosemount 5300 Series Reference Manual (document number 00809-0100-4530) for more mechanical installation information.

Engineered solutions

When standard model codes are not sufficient to fulfill requirements, please consult the factory to explore possible Engineered Solutions. This is typically, but not exclusively, related to the choice of wetted materials or the design of a process connection. These Engineered Solutions are part of the expanded offerings and may be subject to additional delivery lead time. For ordering, factory will supply a special R-labeled numeric option code that should be added at the end of the standard model string. See example model string below.

Example Model String:
5301-H-A-1-S-1-V-1A-M-002-05-AA-I1-M1C1-**R1234**

Chamber/pipe installations

General chamber considerations

The recommended minimum chamber diameter is 4 in. (100 mm) for Single Flexible probe and 3 in. (75 mm) for the Single Rigid probe. The probe should be centered to prevent it touching the sides of the well.

Rosemount 9901 Chamber

Rosemount 9901 allows external mounting of process level instrumentation. It supports a variety of process connections, and optional drain and vent connections. The Rosemount 9901 chamber is designed to the ASME B31.3 standard, and is Pressure Equipment Directive (PED) compliant. Use option code XC to order together with the 5300 Series Transmitters.

Use a centering disc if the probe length >3.3 ft (1 m). See "Probe type in chamber considerations" on page 46 and "Centering discs" on page 46 for which probe and disc to use.

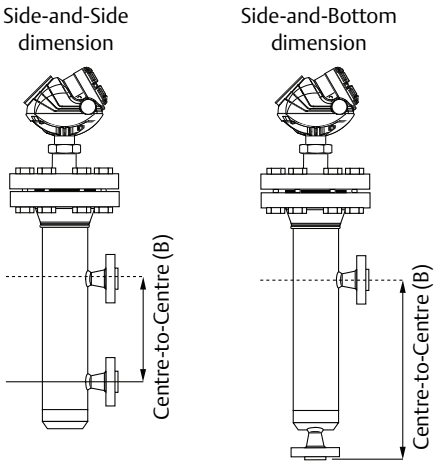

Probe length determination for Rosemount 9901 Chambers

Chamber	Probe length	
	Side-and-side chamber	Side-and-bottom chamber
9901 Standard	B + 19 in. (480 mm)	B + 4 in. (100 mm)
9901 with option G1(1)	B + 25 in. (650 mm)	B + 10 in. (260 mm)
9901 with option G2(2)	B + 36 in. (920 mm)	B + 21 in. (530 mm)

(1) For use with Dynamic Vapor Compensation probe and short reference reflector (GWR option code R1).

(2) For use with Dynamic Vapor Compensation probe and long reference reflector (GWR option code R2).

For additional information, see the Rosemount 9901 Chamber for Process Level Instrumentation Product Data Sheet (document number 00813-0100-4601) and the Combining Guided Wave Radar with Rosemount 9901 Chambers Technical Note (document number 00840-0100-4601).

Existing chamber

A Rosemount 5300 Series Transmitter is the perfect replacement in an existing displacer chamber. Proprietary flanges are offered, enabling use of existing chambers to make installation easy.

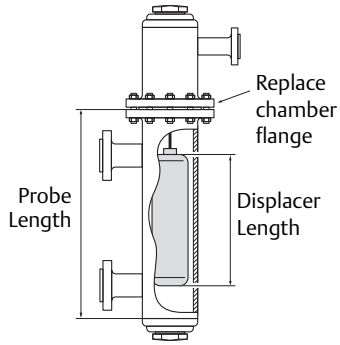

Considerations when changing to 5300 Series:

- The 5300 Series flange choice and probe length must be correctly matched to the chamber. Both standard ANSI and EN (DIN), as well as proprietary chamber flanges, are available. See "Special flanges and flushing connection rings" on page 70 to identify the proprietary flanges.
- See "Probe type in chamber considerations" on page 46 and "Centering discs" on page 46 for which probe and disc to use.
- See table below for guidelines on the required probe length.

Required Probe Length in Existing Displacer Chambers

Chamber manufacturer	Probe length(1)
Major torque-tube manufacture (249B, 249C, 249K, 249N, 259B)	Displacer + 9 in. (229 mm)
Masoneilan (Torque tube operated), proprietary flange	Displacer + 8 in. (203 mm)
Other - torque tube(2)	Displacer + 8 in. (203 mm)
Magnetrol (spring operated)(3)	Displacer + between 7.8 in. (195 mm) to 15 in. (383 mm)
Others - spring operated(2)	Displacer + 19.7 in. (500 mm)

(1) If flushing ring is used, add the ring height to the probe length.

(2) For other manufacturers, there are small variations. This is an approximate value, actual length should be verified.

(3) Lengths vary depending on model, SG and rating, and should be verified.

For additional information, see the Replacing Displacers with Guided Wave Radar Technical Note (Document Number 00840-2200-4811).

Probe type in chamber considerations

When installing a Rosemount 5300 in a chamber, the single lead probe is recommended. An exception is with liquefied gas > 40 bar where the coaxial probe is recommended.

The probe length determines if a Single Rigid or Single Flexible probe should be used:

- Less than 20 ft (6 m):
  Rigid Single Probe is recommended. Use a centering disc for probe > 3.3 ft (1 m). If installation requires less head-space, use a Flexible Single Probe with a weight and centering disc.
- More than 20 ft (6 m):
  Use Flexible Single Probe with a weight and centering disc.

A short weight is available for the single flexible SST probe. It is used for measuring close to the probe end and shall be used where the measuring range must be maximized. The height is 2 in. (50 mm) and the diameter is 1.5 in. (37.5 mm). The option code is W2.

Centering discs

To prevent the probe from contacting the chamber or pipe wall, centering discs are available for rigid single, flexible single, and flexible twin lead probes. The disc is attached to the end of the probe. Discs are made of stainless steel, Alloy C-276, Duplex 2205, or PTFE. The centering disc in PTFE is not available for HTHP probes.

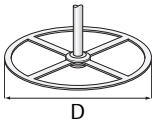

For the segmented rigid single lead probe, up to five PTFE centering discs can be mounted along the probe, but keep a minimum distance of two segments between the discs. Additionally, a disc in SST or PTFE (part number 03300-1655-xxxx) can be attached to the end of the probe.

When mounting a centering disc, it is important that it fits correctly in the chamber/pipe. See Table 8 for Dimension D. Table 9 shows which centering disc diameter to choose for a particular pipe and Table 10 shows which centering disc diameter to choose for a Rosemount 9901 Chamber.

Table 8. Centering Disc Dimensions

Disc size	Actual disc diameter (D)
2 in.	1.8 in. (45 mm)
3 in.	2.7 in. (68 mm)
4 in.	3.6 in. (92 mm)
6 in.	5.55 in. (141 mm)
8 in.	7.40 in. (188 mm)

Table 9. Centering Disc Size Recommendation for Different Pipe Schedules

Pipe size	Pipe schedule			
	5s, 5 & 10s,10	40s, 40 & 80s, 80	120	160
2 in.	2 in.	2 in.	N/A(1)	N/A(2)
3 in.	3 in.	3 in.	N/A(1)	2 in.
4 in.	4 in.	4 in.	4 in.	3 in.
5 in.	4 in.	4 in.	4 in.	4 in.
6 in.	6 in.	6 in.	4 in.	4 in.
7 in.	N/A(1)	6 in.	N/A(1)	N/A(1)
8 in.	8 in.	8 in.	6 in.	6 in.

(1) Schedule is not available for pipe size.

(2) No centering disc is available.

Table 10. Centering Disc Size Recommendations for Rosemount 9901 Chambers

Chamber size	Chamber rating	Centering disc
3 in.	Up to Class 600/PN 100	3 in.
	Class 900, 1500/PN160, 250	2 in.
3 in. T-piece	Up to Class 600/PN 100	2 in.
4 in.	Up to Class 600/PN 100	4 in.
	Class 900, 1500/PN160, 250	3 in.

Product Certifications

EU conformity

The most recent revision of the EC declaration of conformity can be found at www.rosemount.com.

Safety Instrumented Systems (SIS)

SIL 3 Capable: IEC 61508 certified by an accredited 3rd party agency for use in safety instrumented systems up to SIL 3 (Minimum requirement of single use (1oo1) for SIL 2 and redundant use (1oo2) for SIL 3).

For more information, go to:
http://www.rosemount.com/safety

Hazardous locations certifications

North-American certifications

Factory Mutual (FM) Approval
Project ID: 3020497

E5 Explosion-proof:

Explosionproof-Intrinsically Safe for Class I, Div. 1, Groups B, C, and D.
Dust-ignition-proof for Class II/III, Div. 1, Groups E, F, and G with Intrinsically Safe connections to Class I, II, III, Div. 1, Groups B, C, D, E, F, and G.
Temp. Code T4
Ambient temperature limits: -50 °C to +70 °C(1).
Seal not required.
Approval valid for HART, FOUNDATION fieldbus, and Modbus options.

I5, IE Intrinsically Safe, Non-Incendive, and FISCO model:

Intrinsically Safe for Class I, II, III, Div. 1, Groups A, B, C, D, E, F, and G.
Class I, Zone 0, AEx ia IIC T4 when installed per Control Drawing: 9240 030-936.

Non-Incendive for Class I, II, Div. 2, Groups A, B, C, D, F, and G. Suitable for Class III, Div. 2;

4-20 mA/HART model: U_i = 30 Vdc, I_i = 130 mA, P_i = 1.0 W, C_i = 7.26 nF, L_i = 0 H.
Max. operation: 42.4 V, 25 mA
FOUNDATION fieldbus model: U_i = 30 Vdc, I_i = 300 mA, P_i = 1.3 W, C_i = 0 nF, L_i = 0 H.
Max. operation: 32 V, 25 mA
FISCO model: U_i = 17.5 Vdc, I_i = 380 mA, P_i = 5.32 W, L_i = C_i = 0.
Temp. Code T4
Ambient temperature limits: -50 °C to +70 °C(1)
Approval valid for HART, FOUNDATION fieldbus, and FISCO options.

Specific Conditions of Use:
WARNING: Potential Electrostatic Charging Hazard – The enclosure is constructed from a non-metallic material. To prevent the risk of electrostatic sparking the plastic surface should only be cleaned with a damp cloth.
WARNING: The apparatus enclosure contains aluminum and is considered to constitute a potential risk of ignition by impact or friction. Care must be taken into account during installation and use to prevent impact or friction.

Canadian Standards Association (CSA) Approval

Certificate: 1514653

Product options bearing the Dual Seal marking meets the Dual Seal Requirements of ANSI/ISA12.27.01-2003.

Dual seal annunciation
The breach of the secondary seal is annunciated via product leakage from the antenna's vents. The leakage will be visible and/or audible from the transmitter head's threads.

Dual seal maintenance
No maintenance required. Verify proper operation by keeping leak path free from ice or contamination.

E6 Explosion-proof with internal intrinsically safe circuits [Exia]

Class I, Div. 1, Groups B, C, and D;
Class II, Div. 1 and 2, Groups E, F, and G;
Class III
Temp Code T4.
Ambient temperature limits -50 °C to +70 °C(1)
WARNING: The substitution of components may impair intrinsic safety.
Approval valid for HART, FOUNDATION fieldbus, and Modbus options.

(1) +60 °C with FOUNDATION fieldbus or FISCO option.

I6, IF Intrinsically Safe Exia:

Class I, Div. 1, Groups A, B, C, and D.
Temp Code T4.
4-20 mA/HART model: U_i = 30 Vdc, I_i = 130 mA, P_i = 1.0 W, C_i = 7.26 nF, L_i = 0 H.
FOUNDATION fieldbus model: U_i = 30 Vdc, I_i = 300 mA, P_i = 1.3 W, C_i = 0 nF, L_i = 0 H.
FISCO model: U_i = 17.5 Vdc, I_i = 380 mA, P_i = 5.32 W, L_i = C_i = 0.
Installation Drawing: 9240 030-937
Ambient temperature limits -50 °C to +70 °C(1).
WARNING: The substitution of components may impair intrinsic safety.
Approval valid for HART, FOUNDATION fieldbus, and FISCO options.

European certifications

ATEX Approval

Specific Conditions for Safe Use (X):

Valid for E1, I1, and IA approvals only.

1. The intrinsically safe circuits do not withstand the 500V AC test as specified in EN 60079-11:2012 clause 6.4.13.
2. Potential ignition hazards by impact or friction need to be considered according to EN 60079-0:2012 clause 8.3 (for EPL Ga and EPL Gb) and clause 8.4 (for EPL Da and EPL Db), when the transmitter enclosure and antennas exposed to the exterior atmosphere of the tank, is made with light metals containing aluminium or titanium.
   The end user shall determine the suitability with regard to avoid hazards from impact and friction.
3. Parts of the rod-antennas, for type 5300 are non-conducting material covering metal surfaces. The area of the nonconducting part exceeds the maximum permissible areas for Group III according to EN 60079-0:2012 clause 7.4:3. Therefore, when the antenna is used in a potentially explosive atmosphere group III, EPL Da, appropriate measures must be taken to prevent electrostatic discharge.
4. The Ex ia version of model 5300 FISCO field device may be supplied by an “Ex ib” FISCO power supply, when the power supply is certified with three separate safety current limiting devices and voltage limitation which meets the requirements for type Ex ia.
5. ½” NPT threads need to be sealed for dust and water ingress protection, IP 66, IP 67 or ‘Ex t’, EPL Da or Db is required.

E1 Flameproof:

Certificate: Nemko 04ATEX1073X

II 1/2G Ex d ia IIC T4 Ga/Gb
II 1D Ex ta IIIC T79 °C(2) Da
-40 °C ≤ Ta ≤ +70 °C(1)
U_m = 250 V
Approval valid for HART, FOUNDATION fieldbus, and Modbus options.

I1, IA Intrinsically safe and FISCO model:

Certificate: Nemko 04ATEX1073X

II 1G Ex ia IIC T4 Ga
II 1/2G Ex ia/ib IIC T4 Ga/Gb(3)
II 1D Ex ta IIIC T79°C(2) Da
-50 °C ≤ Ta ≤ +70 °C(1)
4-20 mA/HART model: U_i ≤ 30 V, I_i ≤ 130 mA, P_i ≤ 1.0 W, C_i = 7.26 nF, L_i = 0 µH.
FOUNDATION fieldbus model: U_i ≤ 30 Vdc, I_i ≤ 300 mA, P_i ≤ 1.5 W, C_i = 4.95 nF, L_i = 0 µH.
FISCO model: U_i ≤ 17.5 Vdc, I_i ≤ 380 mA, P_i ≤ 5.32 W, C_i = 4.95 nF, L_i < 1 µH.
Installation Drawing: 9240 030-938
Approval valid for HART, FOUNDATION fieldbus, and FISCO options.

N1 Type n:

Certificate: Nemko 10ATEX1072

II 3G Ex nAnL IIC T4 Gc (-50 °C < Ta < +70 °C(1))
4-20 mA/HART model: U_i = 42.2 V, I_i = 23 mA, P_i = 1.0 W, L_i = 0 µH, C_i = 7.25 nF
FOUNDATION fieldbus model: U_i = 32 V, I_i = 21 mA, P_i = 0.7 W, L_i = 0 µH, C_i = 4.95 nF

II 3G Ex nL IIC T4 Gc (-50 °C < Ta < +70 °C(1))
4-20 mA/HART model: U_n = 42.4 V
FOUNDATION fieldbus model: U_n = 32 V

Installation Drawing: 9240 031-957
Approval valid for HART and FOUNDATION fieldbus options.

(1) +60 °C with FOUNDATION fieldbus or FISCO option.

(2) +69 °C with FOUNDATION fieldbus or FISCO option.

(3) Valid for the FISCO option only.

Technical Regulations Customs Union (EAC) certifications

5300 Transmitters comply with the Technical Regulations of the Customs Union TP TC 012/2011; GOST R IEC 60079-0-2011; GOST R IEC 60079-1-2011; GOST R IEC 60079-11-2010; GOST 31610.26-2012/IEC 60079-26:2006

Certificate: RU C-SE.ГБ05.B.00537

Special Conditions for Safe Use (X):

1. Transmitters with Exia marking shall be powered with intrinsic safety barriers certified for compliance.
2. Inductance and capacity of intrinsically safe transmitter circuits, including parameters of cables to be connected, shall not exceed max. values indicated on the intrinsic safety barriers at the side of a hazardous area.
3. Transmitters do not withstand the 500 V_{AC} hipot test for 1 minute.
4. External electric circuits shall be connected to the transmitters via cable entries that were certified for compliance.
5. Unused cable entries of transmitters shall be closed with the plugs that were certified for compliance.
6. Appropriate measures shall be taken to prevent electrostatic discharge if transmitter probes are covered with plastic and/or with plastic discs.
7. To avoid an ignition hazard due to mechanical impact or friction when the aluminum housing transmitters are installed in zone 0.

EM EAC Explosion-proof:

4-20 mA/HART model:
Ga/Gb Ex ia/db ia IIC T1…T4 X (-40 °C ≤ Ta ≤ +70 °C)
U_m: 250 V
Max. operation: 42.4 V, 25 mA

FOUNDATION fieldbus model:
Ga/Gb Ex ia/db ia IIC T1…T4 X (-40 °C ≤ Ta ≤ +60 °C)
U_m: 250 V
Max. operation: 32 V, 21 mA

Modbus RS-485:
Ga/Gb Ex ia/db ia IIC T1…T4 X (-40 °C ≤ Ta ≤ +70 °C)
U_m: 250 V
Max. operation: 30 V, 1.2 W

IM EAC Intrinsically Safe:

4-20 mA/HART model:
0Ex ia IIC T1…T4 Ga X (-50 °C ≤ Ta ≤ +70 °C)
U_i = 30 V, I_i = 130 mA, P_i = 1 W, L_i = 0 µH, C_i = 7.26 nF

FOUNDATION fieldbus model:
0Ex ia IIC T1…T4 Ga X (-50 °C ≤ Ta ≤ +60 °C)
U_i = 30 V, I_i = 300 mA, P_i = 1.5 W, L_i = 0 µH, C_i = 4.95 nF

FISCO model:
0Ex ia IIC T1…T4 Ga X or 0Ex ia/ib IIC T1…T4 Ga/Gb X
(-50 °C ≤ Ta ≤ +60 °C)
U_i = 17.5 V, I_i = 380 mA, P_i = 5.32 W, L_i = 1µH, C_i = 4.95 nF

Brazilian certifications

INMETRO approvals

Special Conditions for Safe Use (X):
Letter X in the number of the certificate indicates the following special condition(s) for safe use:

- For models 530xFxxxxxxxxxE1…, 530xFxxxxxxxxxKA…, 530xFxxxxxxxxxKB… or 530xFxxxxxxxxxKC… and when the sensor area requires an EPL Ga, the installation of the transmitter on the process wall must be done in a way that ensures the minimum degree of protection IP67 in the connection, in compliance with regulation ABNT NBR IEC 60529.
- The intrinsically safe circuit did not withstand the dielectric rigidity tests with 500 Vca as specified in clause 6.4.12 of regulation IEC 60079-11.
- Probes covered with plastic or plastic discs should have a non-conductive area not exceeding the maximum permitted area for the MC group, which is 4 cm^2. Therefore, when an antenna is used in a potentially explosive atmosphere, appropriate measures should be taken by the user to prevent electrostatic discharge.
- This equipment contains light metals. The equipment must be installed in a way that the risk of impact or friction with other metal surfaces is eliminated.
- The Ex ia version of the field device of model FISCO 5300 can be provided with a FISCO [Ex ib] power supply when the power supply is certified with three current limiter safety devices separately and with limitation of voltage, complying with the requirements of the Ex ia model.

Certificate: NCC 14.2258X

Standards:
ABNT NBR IEC: 60079-0:2013, 60079-1:2009, 60079-11:2009, 60079-26:2008, 60079-27:2010, 60079-31:2011

E2 Flameproof:

4-20 mA/HART model:
Ex d ia IIC T4 Gb/Ga
Ex ta IIIC T79 °C
-40 °C ≤ Ta ≤ +70 °C
U_m: 250 V

FOUNDATION fieldbus model:
Ex d ia IIC T4 Gb/Ga
Ex ta IIIC T69 °C
-40 °C ≤ Ta ≤ +60 °C
U_m: 250 V

MODBUS model:
Ex d ia IIC T4 Gb/Ga
Ex ta IIIC T79 °C
-40 °C ≤ Ta ≤ +70 °C
U_m: 250 V

I2 Intrinsically safe:

4-20 mA/HART model:
Ex ia IIC T4 Ga
Ex ta IIIC T79 °C
-50 °C ≤ Ta ≤ +70 °C
U_i: 30 V, I_i: 130 mA, P_i: 1.0 W, L_i: 0 µH, C_i: 7.26 nF

FOUNDATION fieldbus model:
Ex ia IIC T4 Ga
Ex ta IIIC T69 °C
-50 °C ≤ Ta ≤ +60 °C
U_i: 30 V, I_i: 300 mA, P_i: 1.5 W, L_i: 0 µH, C_i: 4.95 nF

Installation Drawing: 9240030-938

IB FISCO model:

FISCO Field Device
Ex ia IIC T4 Ga
Ex ia/ib IIC T4 Ga/Gb
Ex ta IIIC T69 °C
-50 °C ≤ Ta ≤ +60 °C
U_i: 17.5 V, I_i: 380 mA, P_i: 5.32 W, L_i: <1 µH, C_i: 4.95 nF

Installation Drawing: 9240030-938

Chinese certifications

National Supervision and Inspection Center for Explosion Protection and Safety of Instrumentation (NEPSI) approvals

Special Conditions for Safe Use (X):
Refer to Certificates GYJ 111230X and GYJ 13.1387.

E3 Flameproof:

4-20 mA/HART model:
Ex d ia IIC T4 (-40 °C < Ta < +70 °C) DIP A20 T_A79 °C

FOUNDATION fieldbus model:
Ex d ia IIC T4 (-40 °C < Ta < +60 °C) DIP A20 T_A69 °C

Approval valid for HART, FOUNDATION fieldbus, and Modbus options.

I3 Intrinsically safe:

4-20 mA/HART model:
Ex ia IIC T4 (-50 °C < Ta < +70 °C) DIP A20 T_A79 °C
U_i = 30 V, I_i = 130 mA, P_i = 1.0 W,
C_i = 7.26 nF, L_i = 0 µH

FOUNDATION fieldbus model:
Ex ia IIC T4 (-50 °C < Ta < +60 °C) DIP A20 T_A69 °C
U_i = 30 V, I_i = 300 mA, P_i = 1.5 W, C_i = 4.95 nF, L_i = 0 µH

Approval valid for HART and FOUNDATION fieldbus options.

IC FOUNDATION fieldbus FISCO model:

Ex ia IIC T4 (-50 °C < Ta< +60 °C) DIP A20 T_A69 °C
U_i = 17.5 V, I_i = 380 mA, P_i = 5.32 W, C_i = 4.95 nF, L_i < 0.1 µH

N3 Type n:

4-20 mA/HART model:
Ex nA nL IIC T4 Gc (-50 °C < Ta < +70 °C)
U_n= 42.4 V, L_i = 0 µH

FOUNDATION fieldbus model:
Ex nA nL IIC T4 Gc (-50 °C < Ta < +60 °C)
U_n = 32 V

Japanese certifications

Technology Institution of Industrial Safety (TIIS) approval

Special Conditions for Safe Use (X):
Refer to certificate TC20104 and TC20192.

E4 Flameproof:

4-20 mA/HART model:
Transmitter: Ex d [ia] IIC T4x
-20 ~ +60 °C
DC 20 - 42.4 V
U_m = 250 V
U_o = 22.2 V
I_o = 177.5 mA
P_o = 0.985 W
Probe: Ex ia IIC T4X

FOUNDATION fieldbus model:
Transmitter: Ex d [ia] IIC T4X
-20 ~ +60 °C
DC 16 - 32 V
U_m = 250 V
U_o = 22.2 V
I_o = 177.5 mA
P_o = 0.985 W
Probe: Ex ia IIC T4X

Installation Drawing: 05300-00548.

Approval valid for HART and FOUNDATION fieldbus options.

IECEx certifications

IECEx approvals

Specific Conditions for Safe Use (X):

Valid for E7, I7, and IG approvals only.

1. The intrinsically safe circuits do not withstand the 500V AC test as specified in IEC 60079-11:2012 clause 6.4.13.
2. Potential ignition hazards by impact or friction need to be considered according to IEC 60079-0:2012 clause 8.3 (for EPL Ga and EPL Gb) and clause 8.4 (for EPL Da and EPL Db), when the transmitter enclosure and antennas exposed to the exterior atmosphere of the tank, is made with light metals containing aluminium or titanium.
   The end user shall determine the suitability with regard to avoid hazards from impact and friction.
3. Parts of the rod-antennas, for type 5300 are non-conducting material covering metal surfaces and the area of the non-conducting part exceeds the maximum permissible areas for Group III according to IEC 60079-0:2011 clause 7.4:3. Therefore, when the antenna is used in a potentially explosive atmosphere group III, EPL Da, appropriate measures must be taken to prevent electrostatic discharge.
4. The Ex ia version of model 5300 FISCO field device may be supplied by an [Ex ib] FISCO power supply when the power supply is certified with three separate safety current limiting devices and voltage limitation which meets the requirements for type Ex ia.
5. ½" NPT threads need to be sealed for dust and water ingress protection, IP 66, IP 67 or 'Ex t', EPL Da or Db is required.

E7 Flameproof:

Certificate: IECEx NEM 06.0001X

Ex d ia IIC T4 Ga/Gb (-40 °C ≤ Ta ≤ +70 °C[(1)])
Ex ta IIIC T 79 °C[(2)] Da (-40 °C ≤ Ta ≤ +70 °C[(1)])
U_m = 250 V.

Approval valid for HART, FOUNDATION fieldbus, and Modbus options.

(1) +60 °C with FOUNDATION fieldbus or FISCO option.

(2) +69 °C with FOUNDATION fieldbus or FISCO option.

I7, IG Intrinsically safe and FISCO model:

Certificate: IECEx NEM 06.0001X

Ex ia IIC T4 Ga (-50 °C ≤ Ta ≤ +70 °C[(1)])
Ex ia/ib IIC T4 Ga/Gb[(2)]
Ex ta IIIC T 79 °C[(3)] Da (-50 °C ≤ Ta ≤ +70 °C[(1)])

4-20 mA/HART model: U_i = 30 Vdc, I_i = 130 mA, P_i = 1.0 W, C_i = 7.26 nF, L_i = 0 H.

FOUNDATION fieldbus model: U_i = 30 Vdc, I_i = 300 mA, P_i = 1.5 W, C_i = 4.95 nF, L_i = 0 H.

FISCO model: U_i = 17.5 Vdc, I_i = 380 mA, P_i = 5.32 W, C_i = 4.95 nF, L_i < 1 µH.

Installation Drawing: 9240 030-938

Approval valid for HART, FOUNDATION fieldbus, and FISCO options.

N7 Type n:

Certificate: IECEx NEM 10.0005

Ex nA nL IIC T4 Gc
4-20 mA/HART model: 42.4VDC, 23mA
FOUNDATION fieldbus model: 32VDC, 21mA

Ex nL IIC T4 Gc
4-20 mA/HART model: U_i = 42.2 V, I_i = 23 mA, P_i = 1.0 W, L_i = 0, C_i = 7.25 nF
FOUNDATION fieldbus model: U_i = 32 V, I_i = 21 mA, P_i = 0.7 W, L_i = 0, C_i = 4.95 nF

Approval valid for HART and FOUNDATION fieldbus options.

Other certifications

U1 Overfill prevention

Certificate: Z-65.16-476
TÜV-tested and approved by DIBt for overfill prevention according to the German WHG regulations
Approval valid for HART and FOUNDATION fieldbus options.

Suitability for intended use

Compliant with NAMUR NE 95, version 07.07.2006 “Basic Principles of Homologation”

Type approval certifications (Marine/shipboard approvals)

SBS American Bureau of Shipping (ABS)

SDN Det Norske Veritas (DNV)

SLL Lloyd's Register

SBV Bureau Veritas

For detailed information on product certificates, refer to the Rosemount 5300 Series Reference Manual (document number 00809-0100-4530).

(1) +60 °C with FOUNDATION fieldbus or FISCO option.

(2) Valid for the FISCO option only.

(3) +69 °C with FOUNDATION fieldbus or FISCO option.

Dimensional Drawings

Figure 4. Rigid Single Lead Probe with Flange Connection

Dimensions are in inches (millimeters).

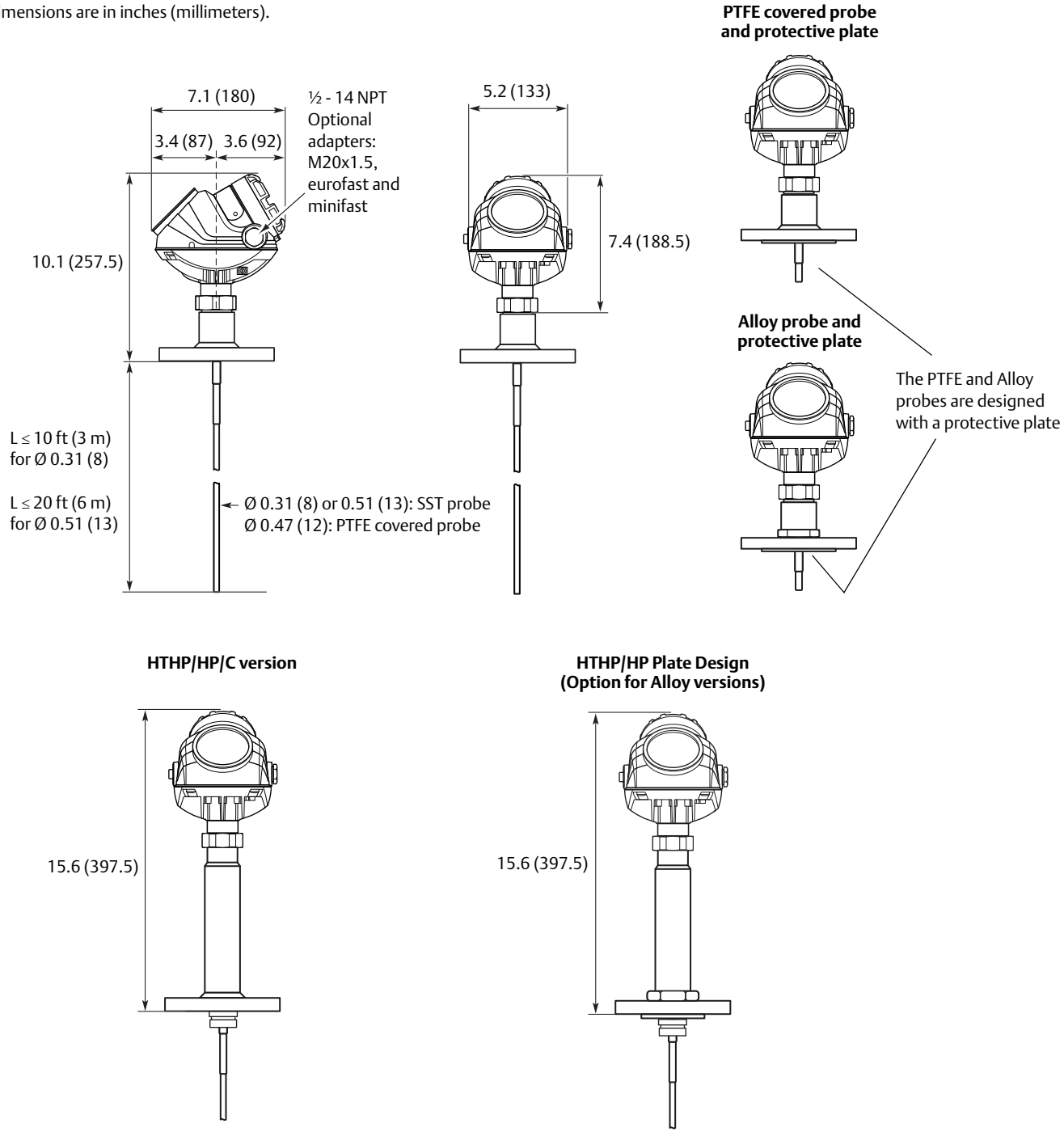

Figure 5. Rigid Single Lead Probe with Tri Clamp Connection

Dimensions are in inches (millimeters).

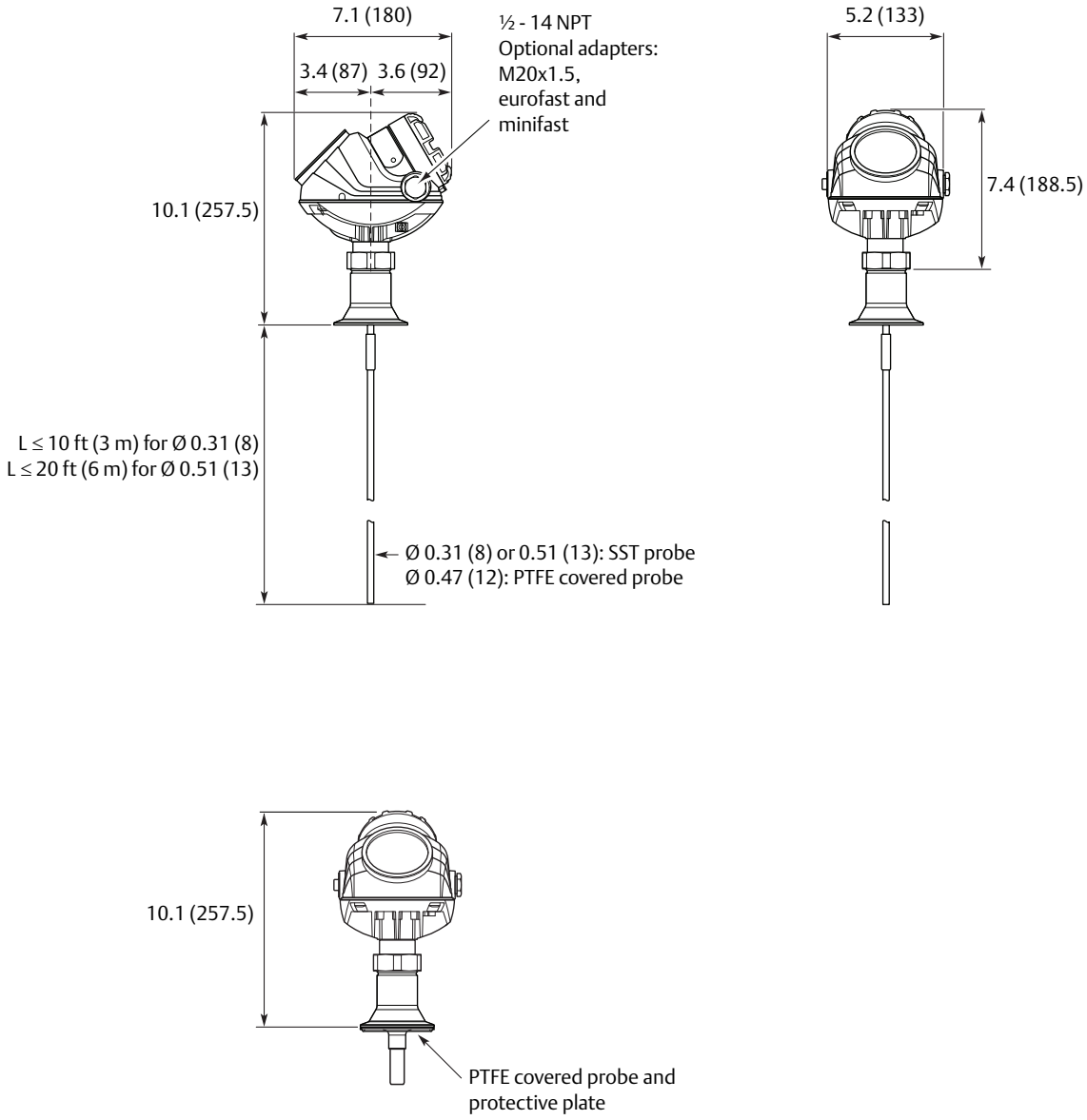

Figure 6. Rigid Single Lead Probe with Threaded Connection

Dimensions are in inches (millimeters).

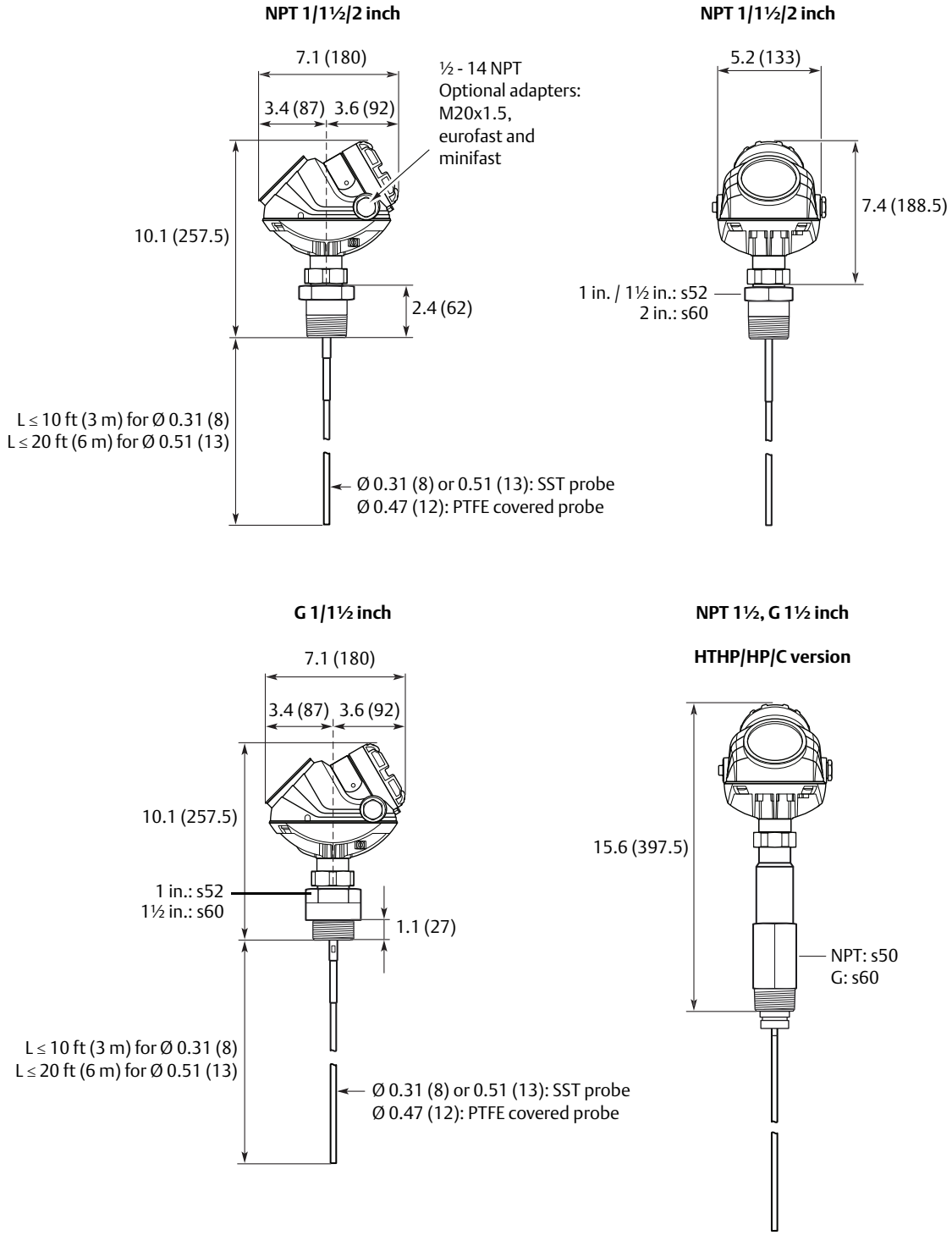

Figure 7. Segmented Rigid Single Lead Probe with Flange Connection

Dimensions are in inches (millimeters).

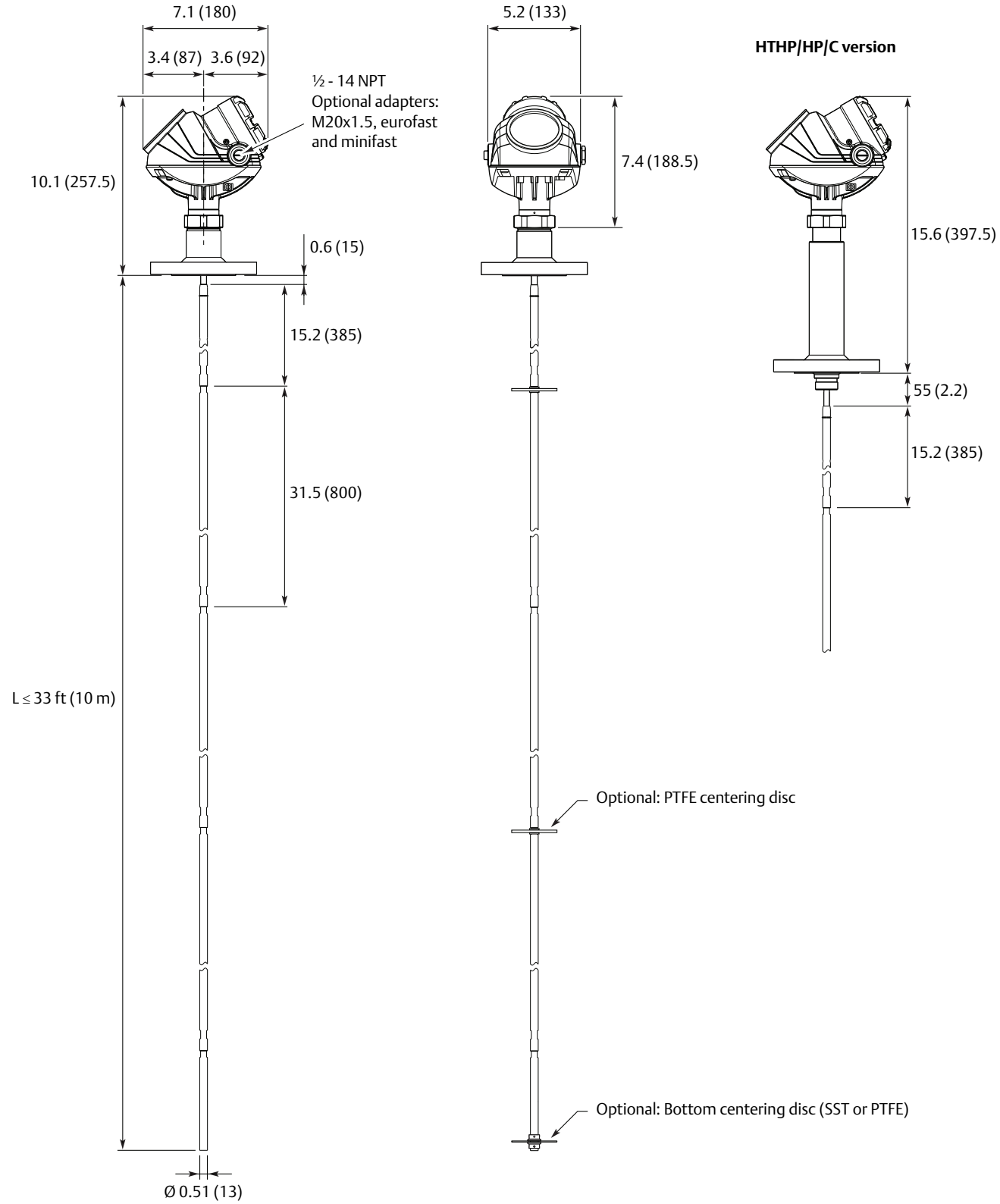

Figure 8. Segmented Rigid Single Lead Probe with Threaded Connection

Dimensions are in inches (millimeters).

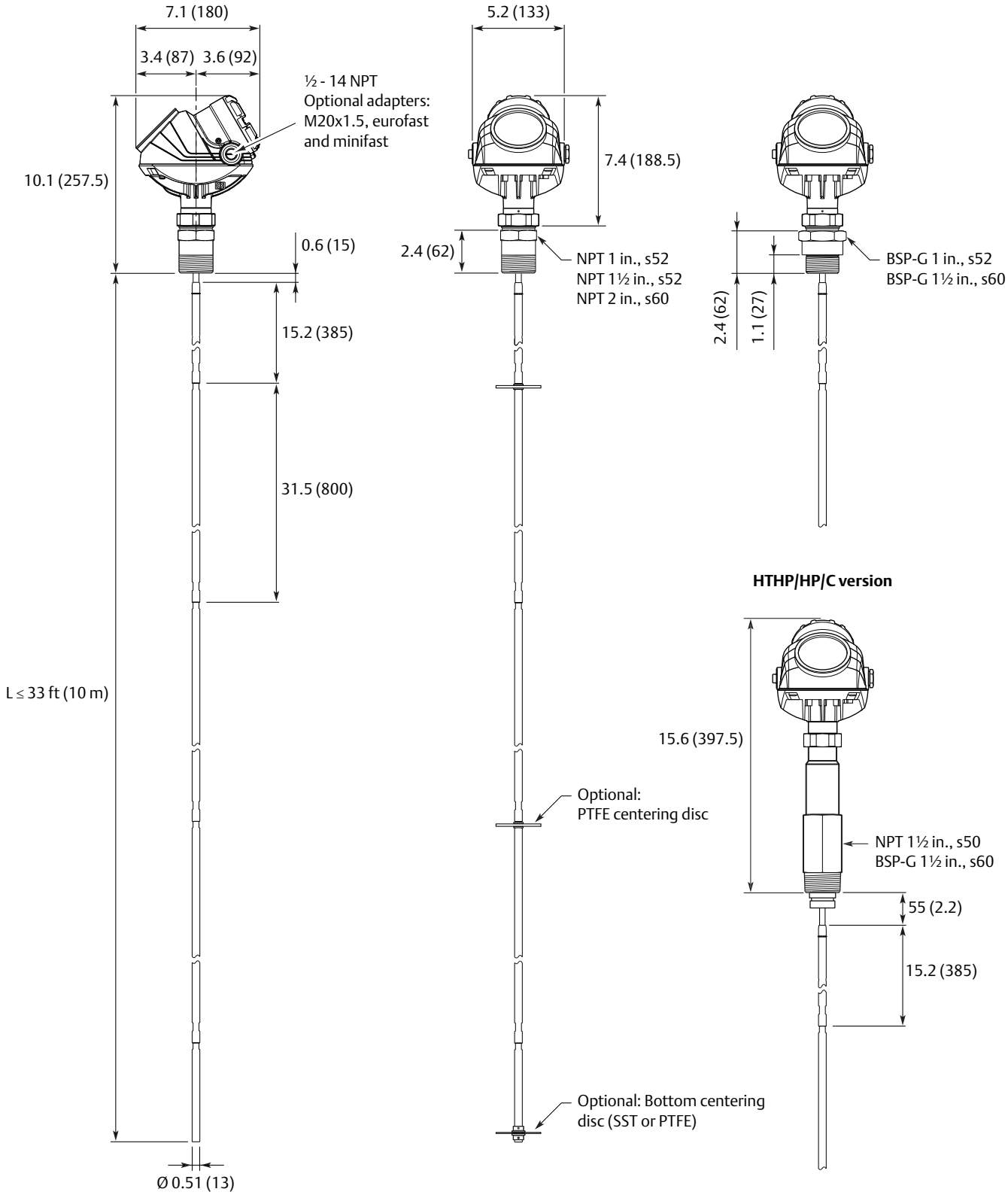

Figure 9. Single Rigid Vapor Probe for 2-in. Chambers

Dimensions are in inches (millimeters).

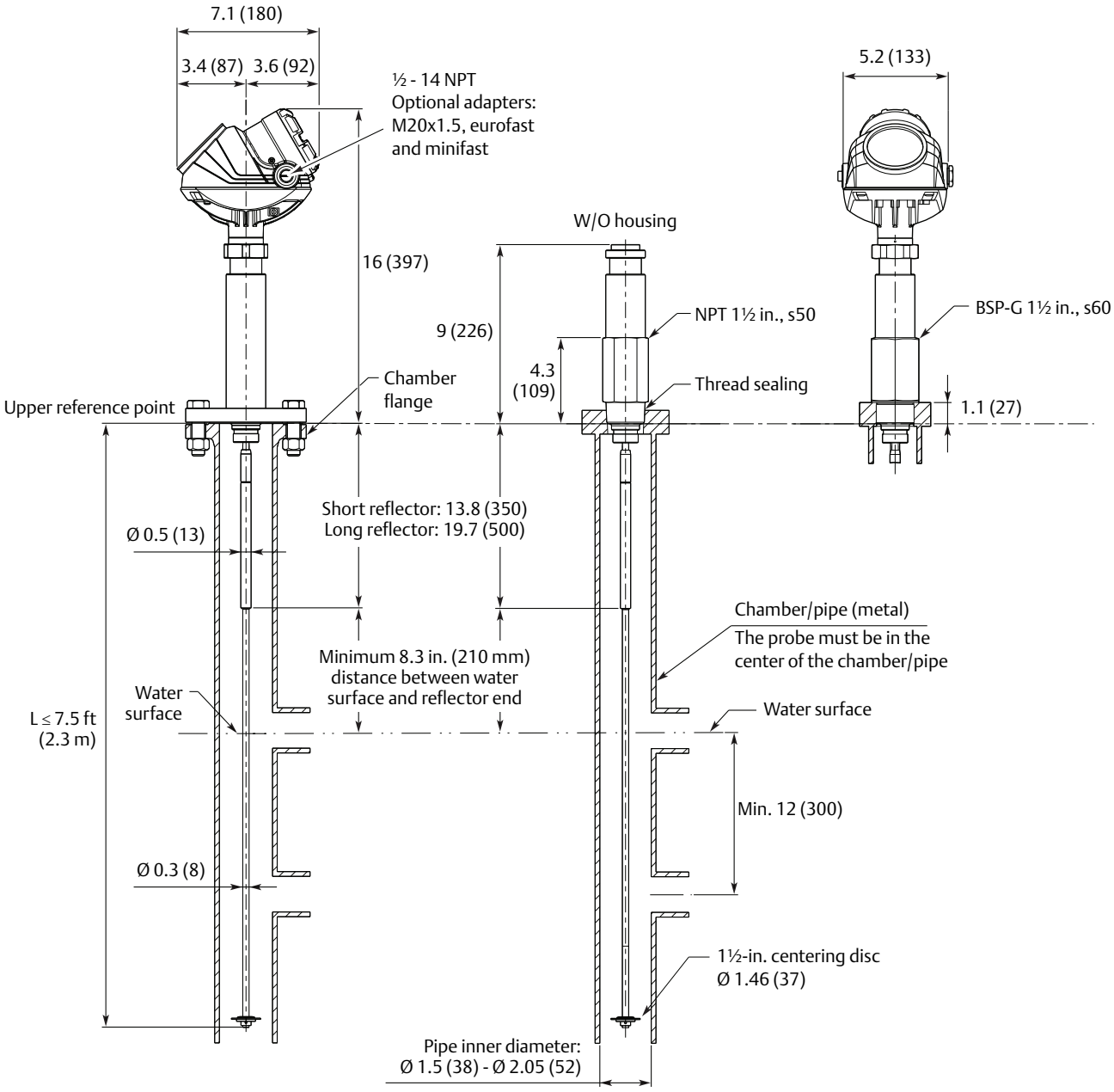

Figure 10. Flexible Single Lead Probe with Flange Connection

Dimensions are in inches (millimeters).

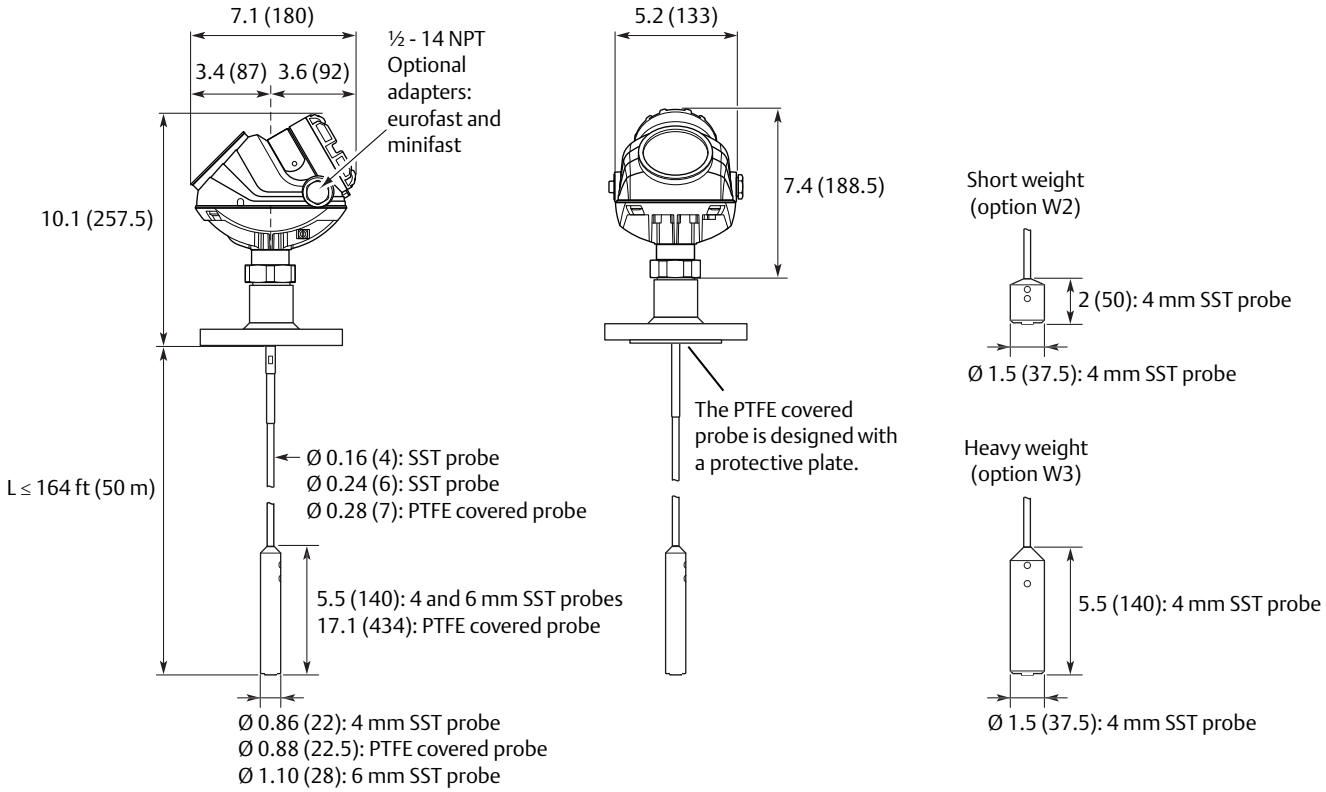

HTHP/HP/C version

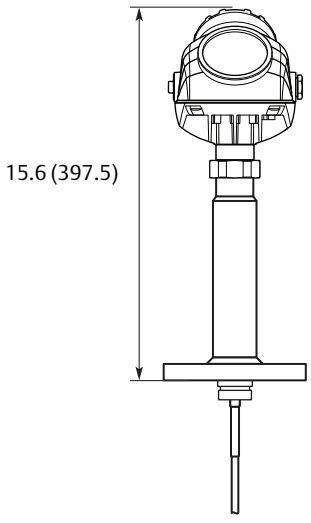

HTHP/HP/C Plate Design
(Option for Alloy versions)

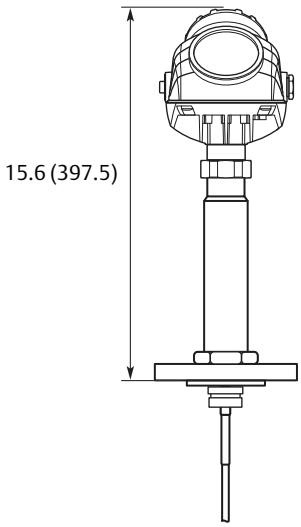

Figure 11. Flexible Single Lead Probe with Tri Clamp Connection

Dimensions are in inches (millimeters).

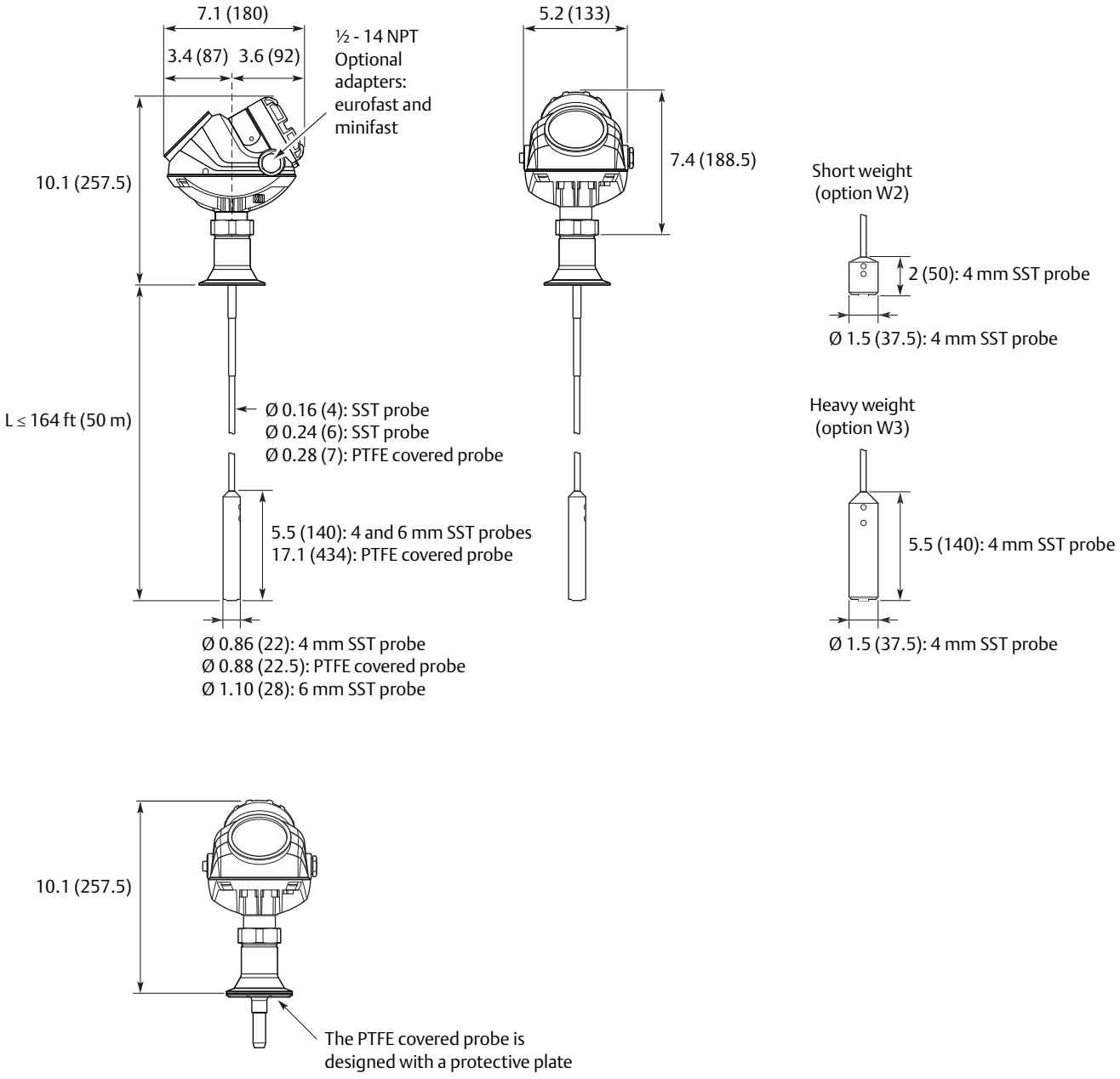

Figure 12. Flexible Single Lead Probe with Threaded Connection

Dimensions are in inches (millimeters).

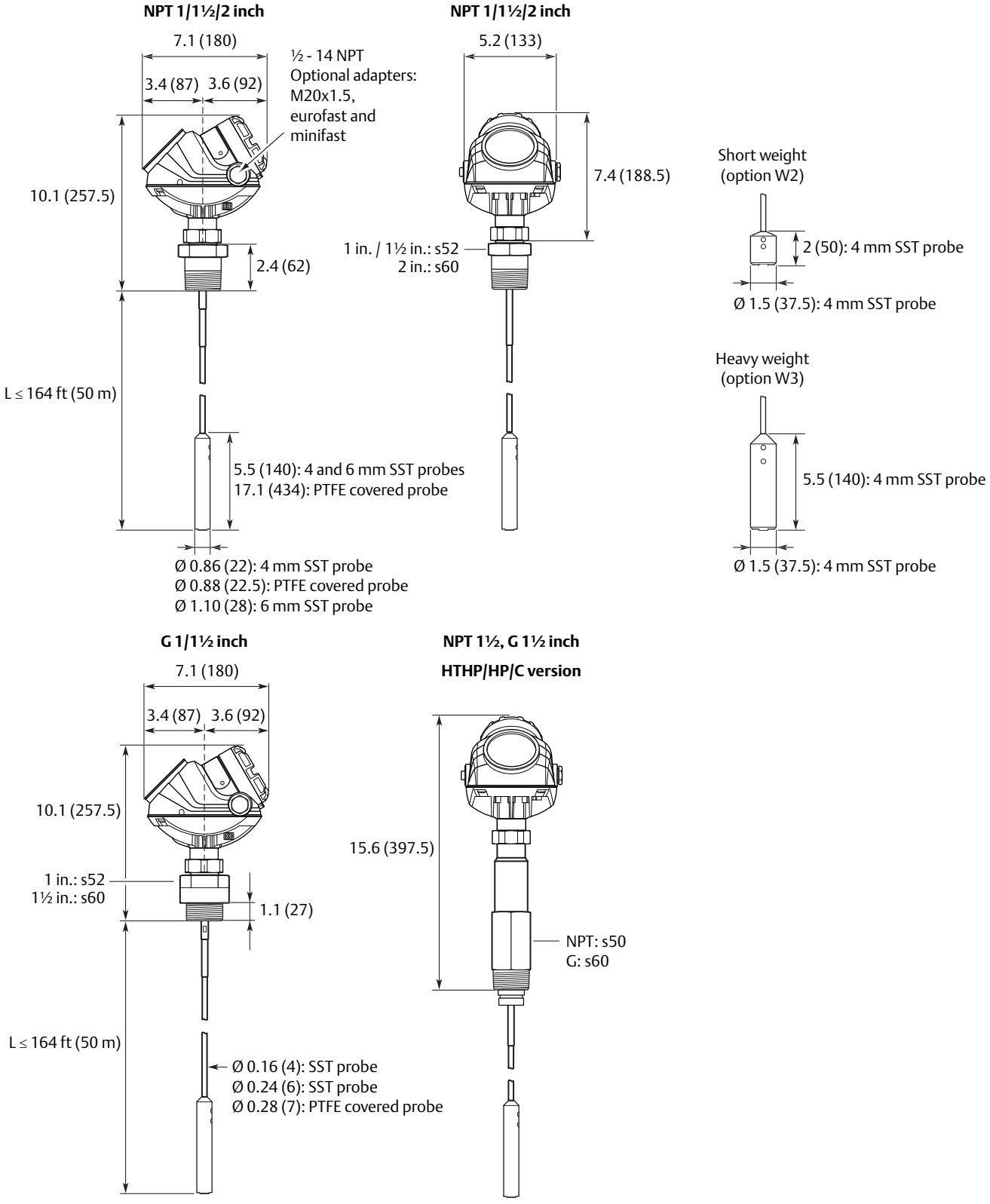

Figure 13. Coaxial Probe with Flange Connection

Dimensions are in inches (millimeters).

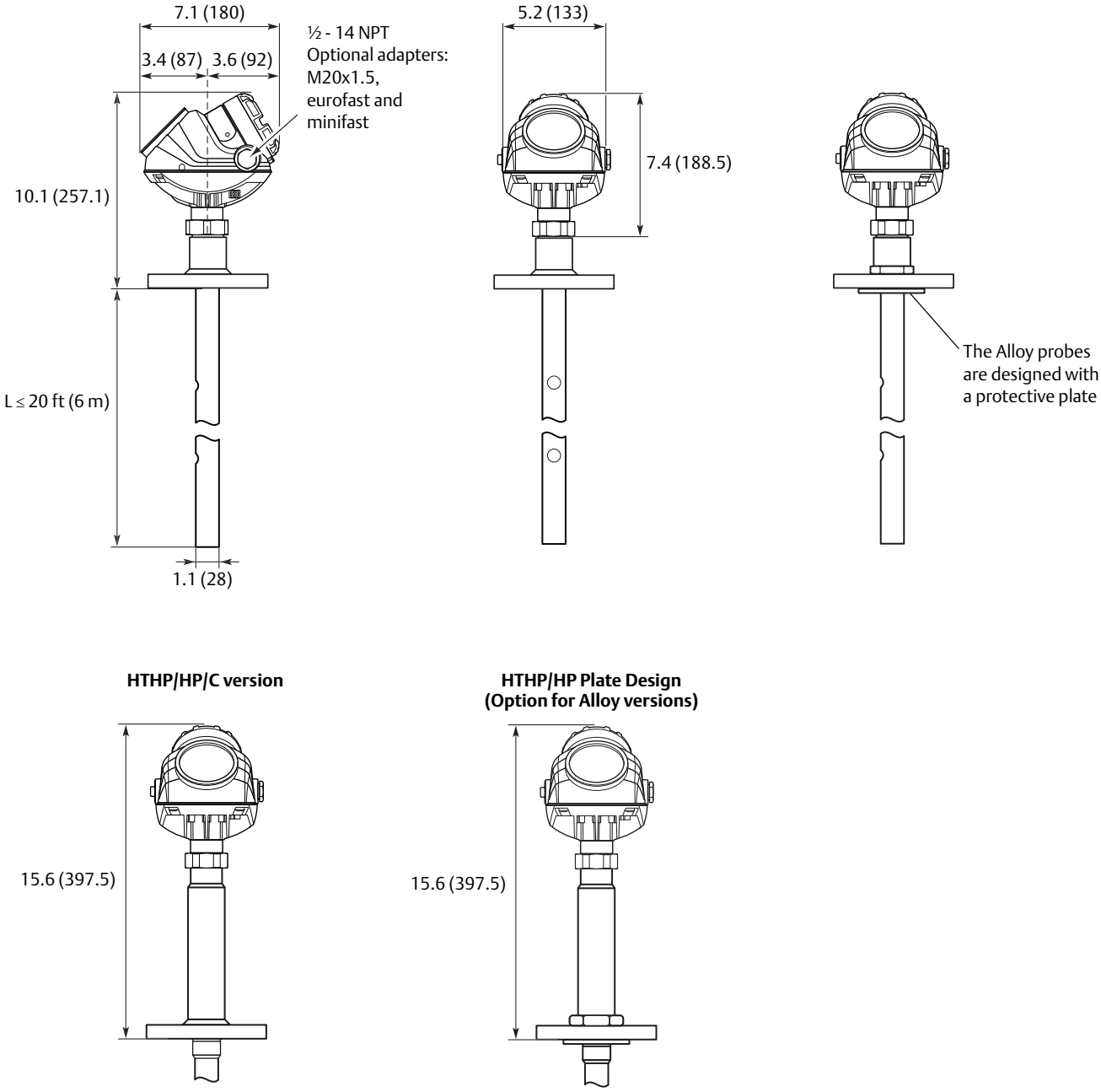

Figure 14. Coaxial Probe with Threaded Connection

Dimensions are in inches (millimeters).

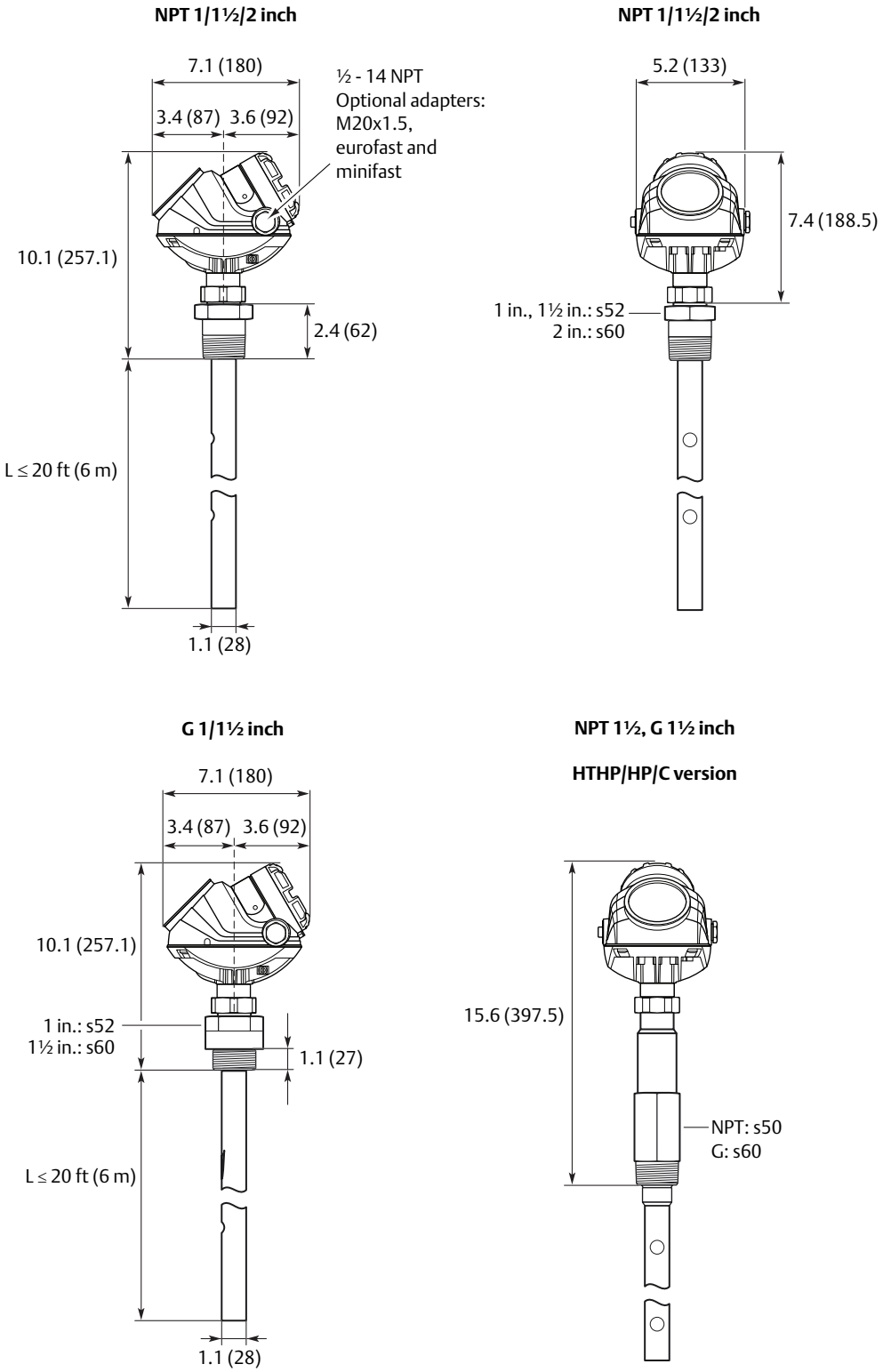

Figure 15. Integrated Still Pipe Vapor Probe for 3-in. Chambers and above

Dimensions are in inches (millimeters).

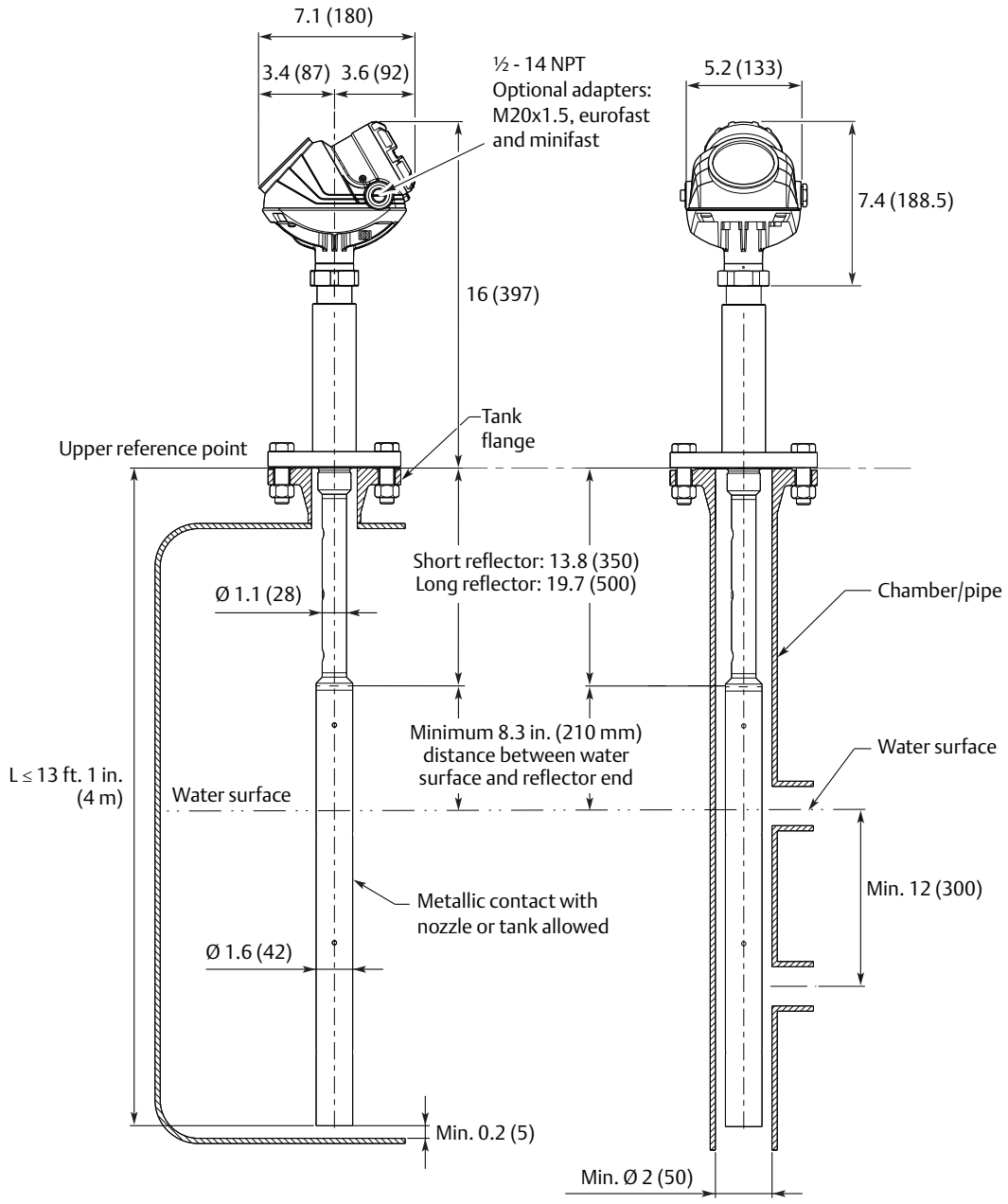

Figure 16. Rigid Twin Lead Probe

Dimensions are in inches (millimeters).

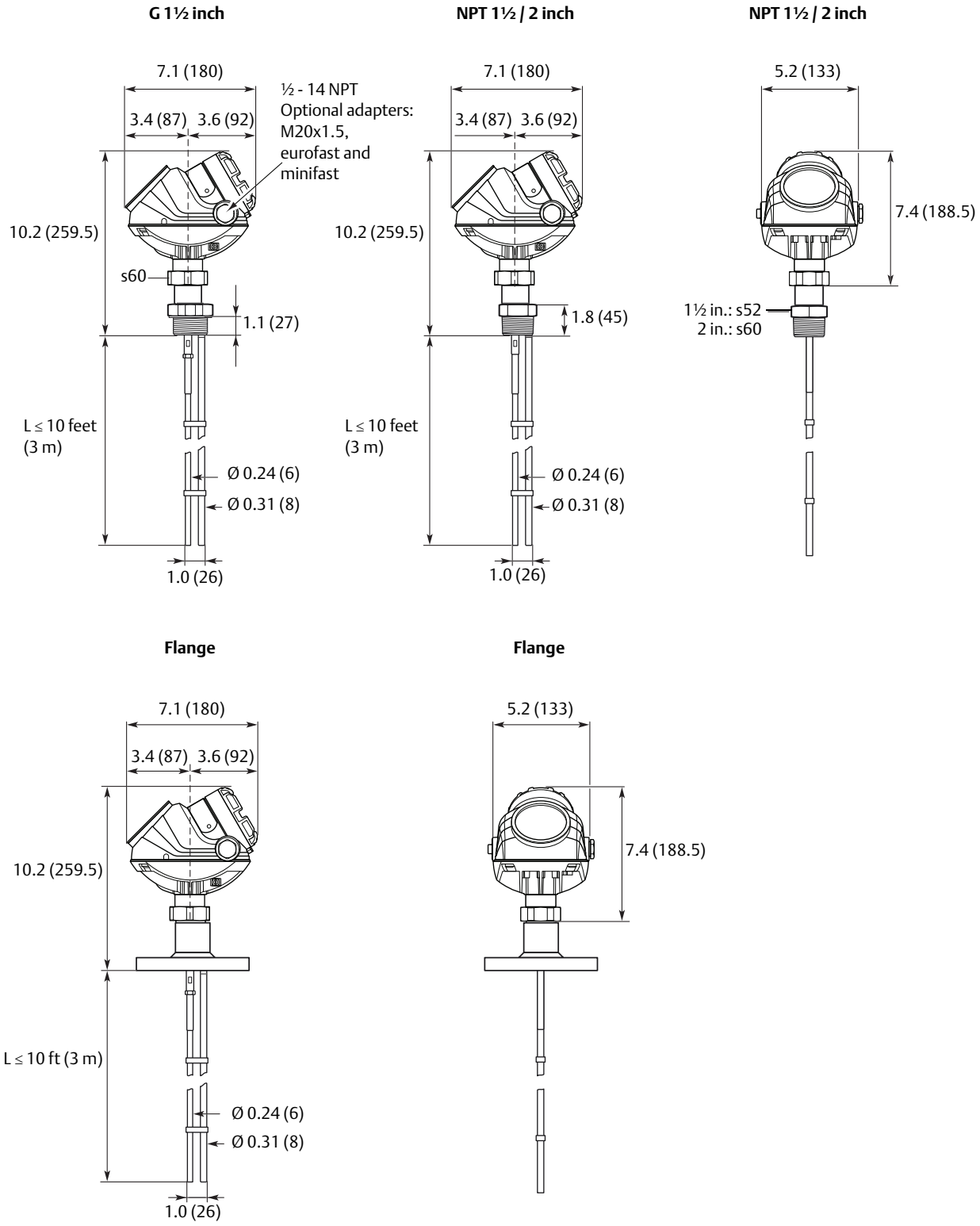

Figure 17. Flexible Twin Lead Probe

Dimensions are in inches (millimeters).

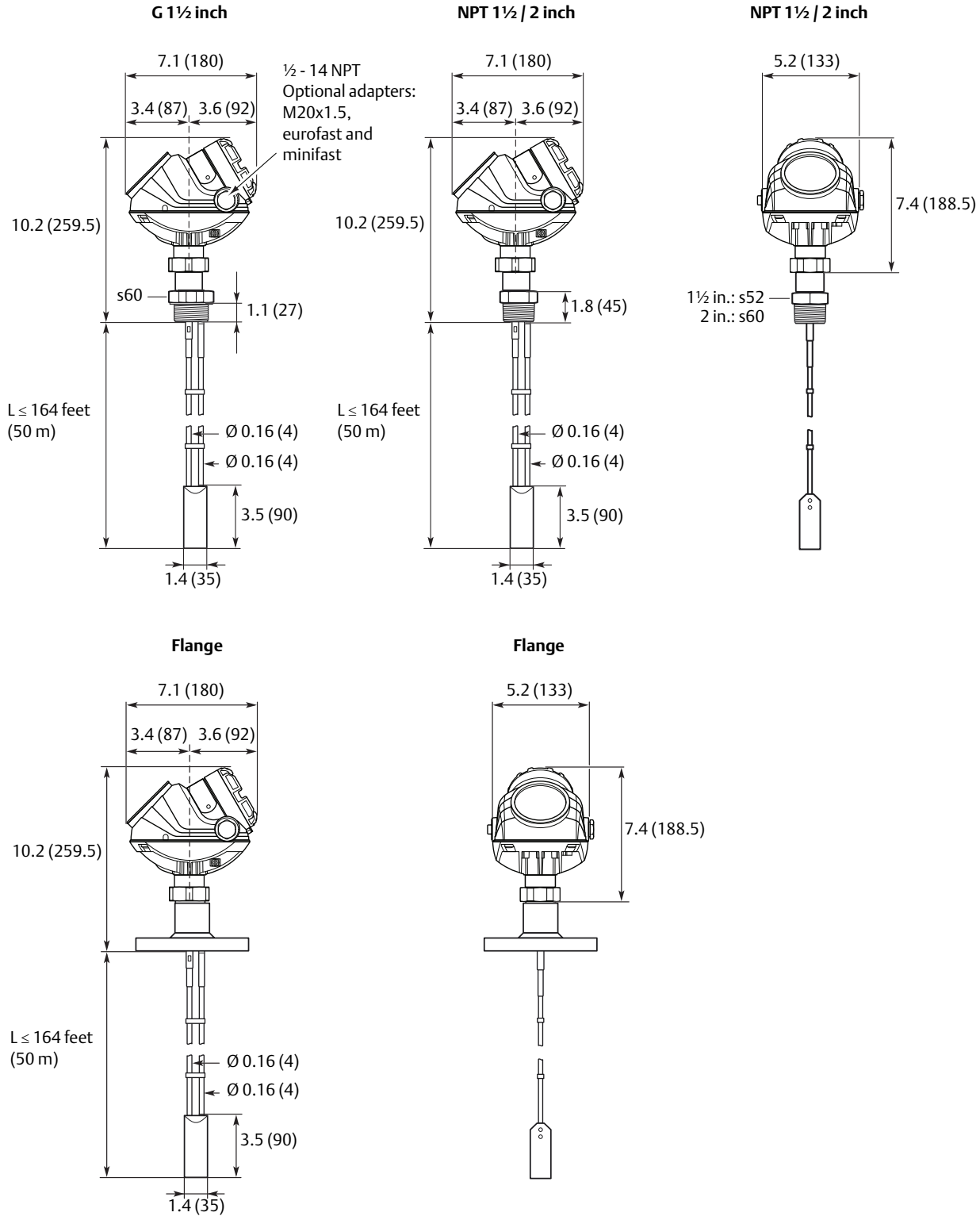

Figure 18. Mounting Bracket (Option Code BR)

Dimensions are in inches (millimeters).

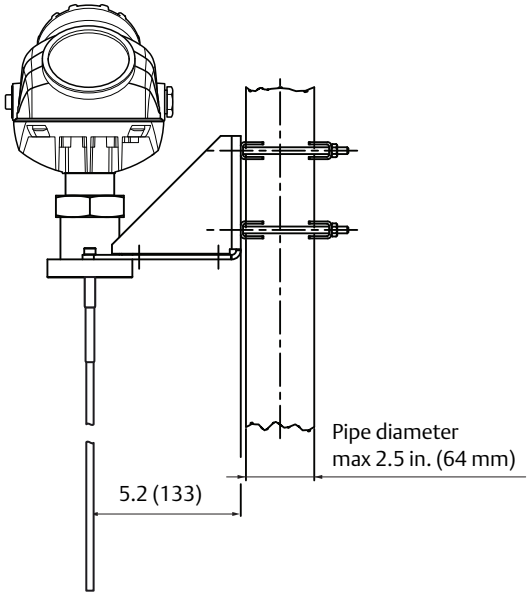

Pipe mounting
(vertical pipe)

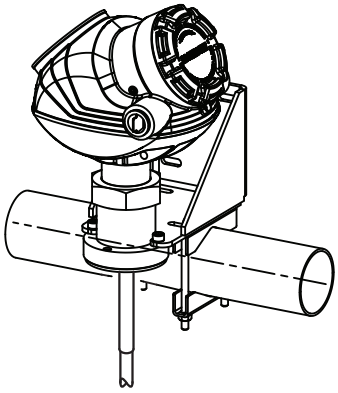

Pipe mounting
(horizontal pipe)

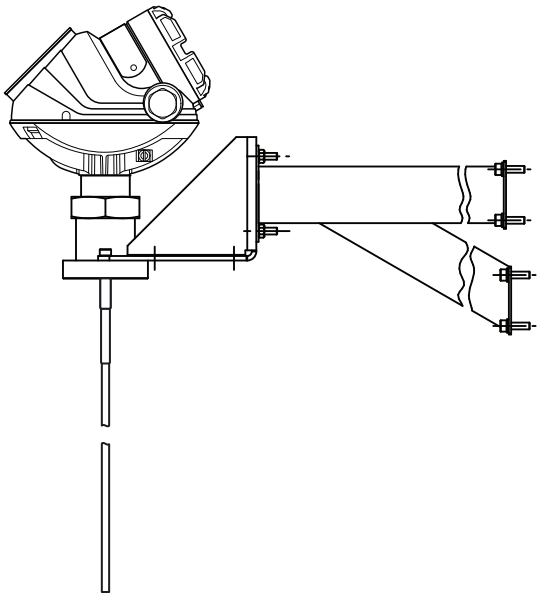

Wall mounting

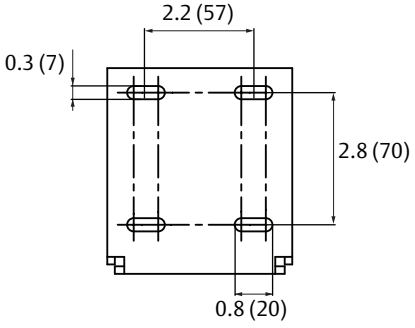

Hole pattern
wall mounting

Figure 19. Remote Housing (Option Code B1, B2, B3)

Dimensions are in inches (millimeters).

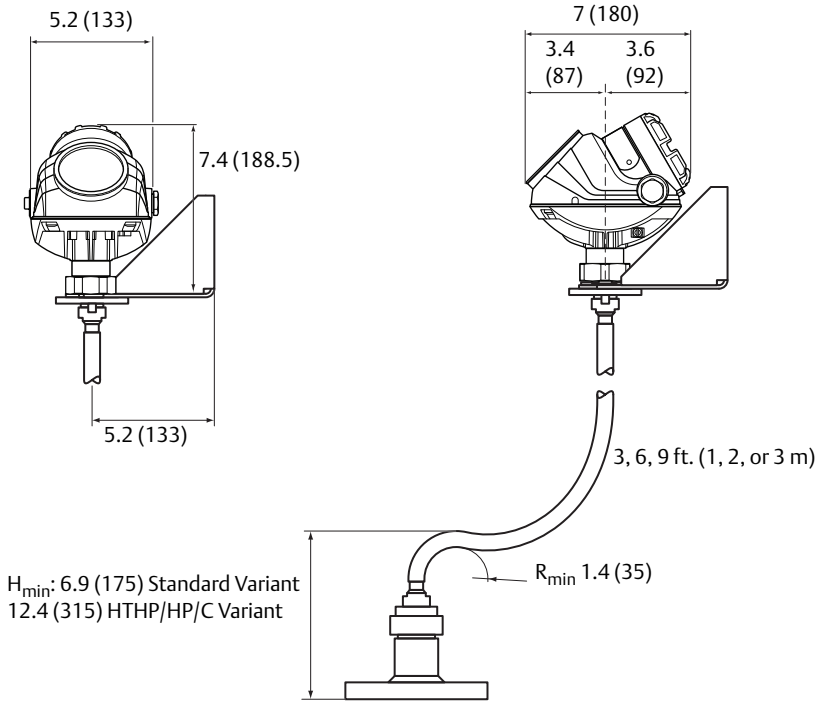

Special flanges and flushing connection rings

Raised Face **Recessed Face**

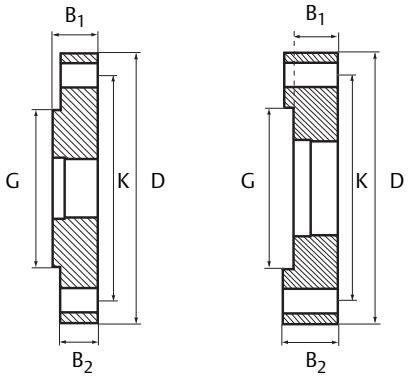

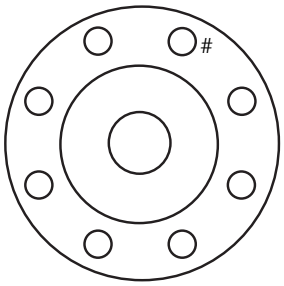

Dimensions are in inches (millimeters).

D: Outside diameter

B_1: Flange thickness with gasket surface

B_2: Flange thickness without gasket surface

$F=B_1-B_2$: Gasket surface thickness

G: Gasket surface diameter

Bolts: Number of bolts

K: Bolt hole circle diameter

Note
Dimensions may be used to aid in the identification of installed flanges. It is not intended for manufacturing use.

Special flanges(1)	D	B_1	B_2	F	G	# Bolts	K
Fisher 249B/259B(2)	9.00 (228.6)	1.50 (38.2)	1.25 (31.8)	0.25 (6.4)	5.23 (132.8)	8	7.25 (184.2)
Fisher 249C(3)	5.69 (144.5)	0.94 (23.8)	1.13 (28.6)	-0.19 (-4.8)	3.37 (85.7)	8	4.75 (120.65)
Masoneilan(2)	7.51 (191.0)	1.54 (39.0)	1.30 (33.0)	0.24 (6.0)	4.02 (102.0)	8	5.87 (149.0)

(1) These flanges are also available in a vented version.

(2) Flange with raised face.

(3) Flange with recessed face.

Masoneilan and Fisher flanges are also available in vented versions (see "Vented flanges" on page 23), with the same dimensions as shown in the table above.

Vented flanges must be ordered with a 1½-in. NPT threaded process connection (code RA).

For information about flange temperature and pressure ratings, see page 30.

Flushing Connection Ring

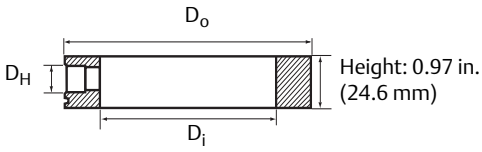

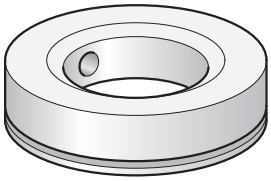

Table 11. Pressure and Temperature Rating for Flushing Ring up to Class 2500

Flushing connection rings	D_i	D_o	D_H
2 in. ANSI	2.12 (53.8)	3.62 (91.9)	¼ in. NPT
3 in. ANSI	3.60 (91.4)	5.00 (127.0)	¼ in. NPT
4 in. ANSI	3.60 (91.4)	6.20 (157.5)	¼ in. NPT
DN50	2.40 (61.0)	4.00 (102.0)	¼ in. NPT
DN80	3.60 (91.4)	5.43 (138.0)	¼ in. NPT

Global Headquarters
Emerson Process Management
6021 Innovation Blvd
Shakopee, MN 55379, USA
+1 800 999 9307 or +1 952 906 8888
+1 952 949 7001
RFQ.RMD-RCC@EmersonProcess.com

North America Regional Office
Emerson Process Management
8200 Market Blvd.
Chanhassen, MN 55317, USA
+1 800 999 9307 or +1 952 906 8888
+1 952 949 7001
RMT-NA.RCCRFQ@Emerson.com

Latin America Regional Office
Emerson Process Management
1300 Concord Terrace, Suite 400
Sunrise, Florida, 33323, USA
+1 954 846 5030
+1 954 846 5121
RFQ.RMD-RCC@EmersonProcess.com

Europe Regional Office
Emerson Process Management Europe GmbH
Neuhofstrasse 19a P.O. Box 1046
CH 6340 Baar
Switzerland
+41 (0) 41 768 6111
+41 (0) 41 768 6300
RFQ.RMD-RCC@EmersonProcess.com

Asia Pacific Regional Office
Emerson Process Management Asia Pacific Pte Ltd
1 Pandan Crescent
Singapore 128461
+65 6777 8211
+65 6777 0947
Enquiries@AP.EmersonProcess.com

Middle East and Africa Regional Office
Emerson Process Management
Emerson FZE P.O. Box 17033,
Jebel Ali Free Zone - South 2
Dubai, United Arab Emirates
+971 4 8118100
+971 4 8865465
RFQ.RMTMEA@Emerson.com

Standard Terms and Conditions of Sale can be found at:
www.rosemount.com\terms_of_sale.
The Emerson logo is a trademark and service mark of Emerson Electric Co.
Rosemount and Rosemount logotype are registered trademarks of Rosemount Inc.
Fisher and PlantWeb are registered trademarks of one of the Emerson Process Management group of companies.
DeltaV is a trademark of Emerson Process Management.
THUM, and Tri-Loop are trademarks of Rosemount Inc.
AMS is a registered trademark of Emerson Electrical Co.
HART and *Wireless*HART are registered trademarks of the FieldComm Group.
FOUNDATION fieldbus is a trademark of the FieldComm Group.
Modbus is a registered trademark of Modicon, Inc.
FDT is a registered trademark of the FDT Group.
DTM is a trademark of the FDT group.
eurofast and minifast are registered trademarks of TURCK.
FieldCare is a registered trademark of Endress+Hauser Process Solutions AG.
PACT*ware* is trademark of PACTware Consortium.
Viton and Kalrez are registered trademarks of DuPont Performance Elastomers.
MACTek and VIATOR are registered trademarks of MACTek Corporation.
NACE is a registered trademark of NACE International.
Masoneilan is a trademark of the General Electric Company.
NEMA is a registered trademark and service mark of the National Electrical Manufacturers Association.
All other marks are the property of their respective owners.
© 2015 Rosemount Inc. All rights reserved.

ROSEMOUNT®

EMERSON™
Process Management